WAVELINE INC.

Variable Calibrated Rotary Vane Attenuators

2.60 to 50.0 GHz
0 to 60 dB

Print Page
<<== BACK

Prev Catalog Page
Next Catalog Page
New-Search

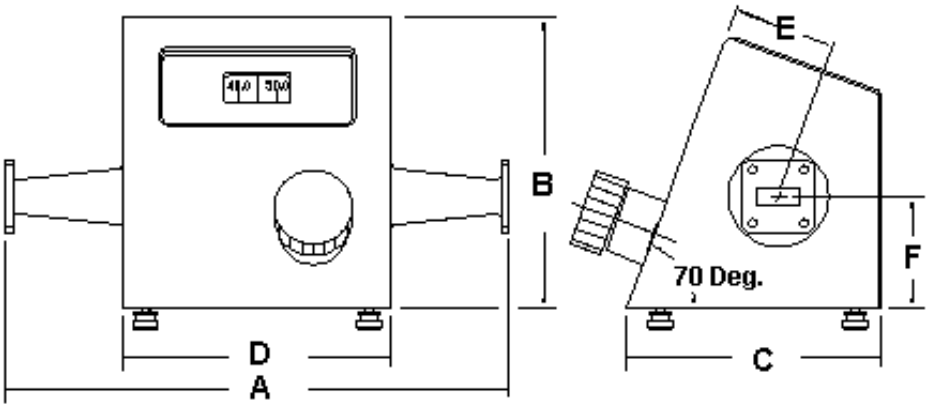

Series 22 Table or Bench Unit

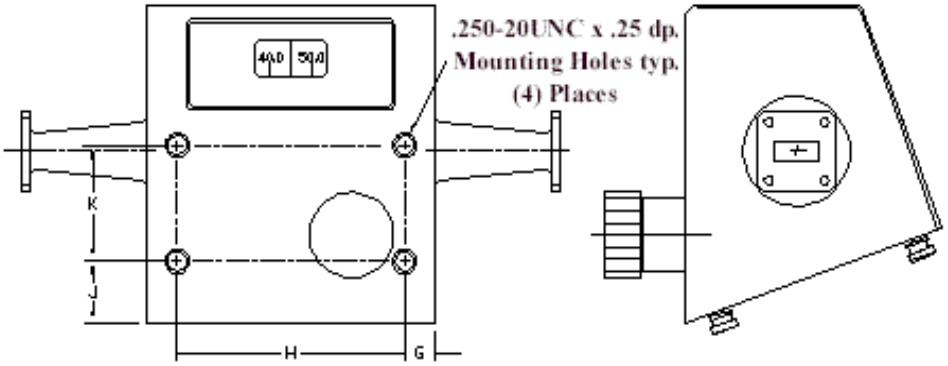

Series 22-R are Panel or Rack mounted units

Calibrated Variable Precision Rotary Vane Attenuators

These direct reading precision units provide varying attenuation values that depend on mathematical law and are independent of frequency. The effects of varying temperature and humidity conditions are almost negligible and therefore the stability of the attenuation setting is assured for full frequency range operation.

A specially designed cylindrical waveguide section contains matched precision metallized attenuating elements which are rotated to exactly angular positions. Attenuation readout is provided through use of a precision stainless steel tape mechanism which presents an overall scale length greater than thirty inches.

The size of these units have been minimized by incorporating newly developed waveguide cylindrical sections and greatly improved transition techniques. Because of the reduced size and short length, as well as the inherent rugged construction, these units are readily adaptable for special systems applications. Finish is instrument gray enamel.

General Specifications:

Attenuation Range . . . . . 0 to 60.0 dB
VSWR . . . . .1.15 maximum
Accuracy:
0 to 50 dB . . . . . +/-2% of dB reading or +/-0.1 dB, whichever is greater
50 to 60 dB . . . . . .Usable as reference only
Insertion Loss. . . . . .1.0 dB maximum (0.5 dB typical)

Important ordering information: Add suffix "R" for panel mounting.

WG Size	Frequency Range, GHz	Equivalent Flange Type	WG Mt.	Avg. Power Capability Watts	Model No.	Model No.
WR-284	2.60 to 3.95	UG-584/U AL Cover	AL	15	222	-
WR-229	3.30 to 4.90	CMR-229 AL Flat	AL	15	2922	2922-R
WR-187	3.95 to 5.85	UG-407/U AL Cover	AL	15	322	322-R
WR-159	4.90 to 7.05	CMR-159 AL Flat	AL	15	5922	5922-R
WR-137	5.85 to 8.20	UG-344/U BR Cover	BR	10	422	422-R
WR-112	7.05 to 10.0	UG-138/U AL Cover	AL	10	522	522-R
WR-102	7.00 to 11.0	WR-102 AL Cover	AL	10	0222	0222-R
WR-90	8.2 to 12.4	UG-135/U AL Cover	AL	10	622	622-R
WR-75	10.0 to 15.0	WR75 AL Cover	AL	10	7522	7522-R
WR-62	12.4 to 18.0	UG-1665/U AL Cover	AL	5	722	722-R
WR-51	15.0 to 22.0	WR-51 AL Cover	AL	2	5122	5122-R
WR-42	18.0 to 26.5	UG-597/U AL Cover	AL	2	822	822-R
WR-28	26.5 to 40.0	UG-599/U-AL Cover	AL	2	1022	1022-R
WR-22	33.0 to 50.0	WR-22 BR Rd. Cover	BR	1/2	1122	1122-R

In. A	In. B	In. C	In. D	In. E	In. F	In. G	In. H	In. J	In. K	Model No.	Model No.
25.50	7.94	8.42	7.50	4.13	3.00	-	-	-	-	222	-
27.50	7.94	8.42	7.50	4.13	3.00	.63	6.25	1.38	5.94	2922	2922-R
20.50	7.22	7.00	6.50	3.22	2.75	.63	5.25	1.38	3.38	322	322-R
18.00	7.22	7.00	6.50	3.22	2.75	.63	5.25	1.38	3.38	5922	5922-R
14.88	7.22	7.00	6.50	3.22	2.75	.63	5.25	1.38	3.38	422	422-R
12.00	7.22	7.00	6.50	3.22	2.75	.63	5.25	1.38	3.38	522	522-R
16.94	7.22	7.00	6.50	3.22	2.75	.63	5.25	1.38	3.38	0222	0222-R
11.25	6.13	5.70	6.00	2.33	2.50	.63	4.75	1.27	2.38	622	622-R
9.50	6.13	5.70	6.00	2.33	2.50	.63	4.75	1.27	2.38	7522	7522-R
10.00	6.13	5.56	6.00	2.33	2.50	.63	4.75	1.27	2.38	722	722-R
8.50	5.87	5.51	4.50	2.34	2.38	.56	3.38	.77	2.88	5122	5122-R
7.40	5.87	5.51	4.50	2.34	2.38	.56	3.38	.77	2.88	822	822-R
7.00	5.87	5.51	4.50	2.34	2.38	.56	3.38	.77	2.88	1022	1022-R
6.00	5.87	5.51	4.50	2.34	2.38	.56	3.38	.77	2.88	1122	1122-R

Please call if you need any further assistance or information.