LAMBDA'S LT SERIES

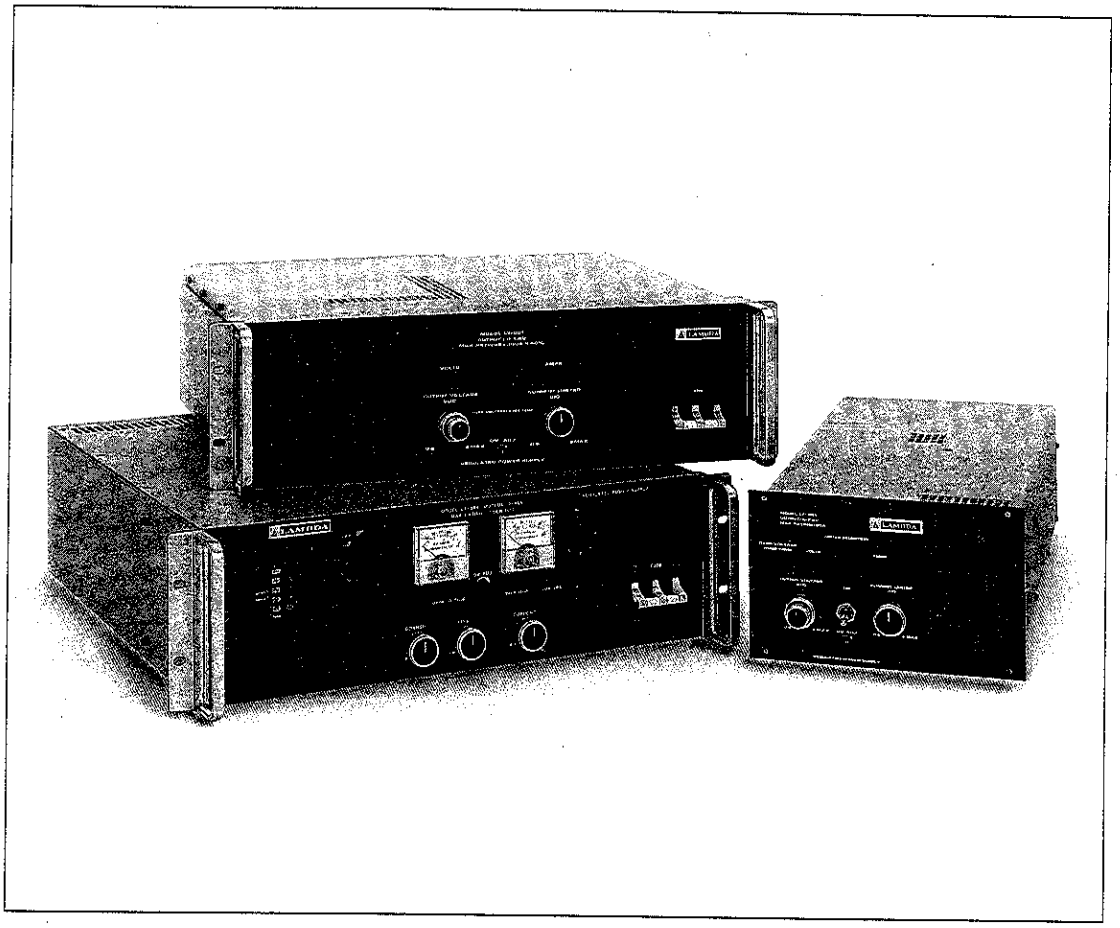

Up to 500A for Test, Burn-in and ATE Systems Applications

Lambda's LT Series is 35% smaller, 80% lighter and costs less than equivalent 4KW SCR power supplies. They are available in 12 models up to 60 VDC, up to 500A.

The LT Series is designed with adjustable overvoltage protection, constant voltage/constant current operation, and an operating temperature range from 0-71°C. All models are backed by Lambda's 5-year guarantee.

LT SERIES SPECIFICATIONS

AC Input

line ..... LT-800 Series: 187 to 242VAC (205 to 265VAC on "V1" option), 47-63Hz. (Derate all ratings by 10% at 47-53Hz)
LT-820 Series: 187 to 229VAC, 3 phase ±10% max phase imbalance, 4 wire, 47-63Hz (207 to 253VAC on "V1" option). (Derate 40°C ratings by 10% at 47-53Hz.)
LT-860 Series: 187 to 265VAC, 3 phase ±10% max phase imbalance, 4 wire, 47-63Hz.

power ..... LT-800 Series: 1985 watts maximum.
LT-820 Series: 4000 watts maximum.
LT-860 Series: 5000 watts maximum.

input current ..... LT-800 Series: 18A RMS maximum.
LT820, 860 Series: 17A RMS maximum per phase.

Efficiency
Minimum 65% at maximum output voltage for LT-800 Series, 70% for LT-820 Series, 78% for LT-860 Series.

EMI
Conducted EMI conforms to FCC 20780 class A on LT-800 and LT-820 Series.

DC Output
Voltage range shown in table.

Regulated Voltage Constant

regulation, line ..... 0.02% + 2mV for line variations from low line to high line and high line to low line. 0.05% for LT-860.

regulation, load ..... 0.02% + 2mV on LT-801, 802, 821, 822. 0.02% + 4mV on LT-803, 804, 823, 824. 0.05% on LT-860 for load variations from 0 to full load.

remote programming resistance ..... 200Ω/volt nominal.

remote programming voltage ... Volt per volt.

ripple and noise (20MHz Bandwidth) ..... 10mV RMS, 50mV pk-pk for LT-801, 821. 15mV RMS, 100mV pk-pk for LT-802, 803, 804, 822, 823, 824. 20mV RMS, for LT-860.

temperature coefficient ..... (0.02% + 50μV)/°C.

Constant Current

(Current regulated line and load) Automatic Crossover.

voltage range ..... As shown in Table.

current range ..... 5% to full load current.

regulation, line ..... 0.3% for line variations from low line to high line and high line to low line.

regulation, load ..... 0.3% of Io (max) for load variations from 5% to rated DC voltage.

Thermal Protection
Thermostat protects unit from excessive ambient temperature as well as inadequate air velocity. AC power must be momentarily removed from unit after thermal shutdown in order to restore operation.

Overcurrent Protection
External overload protection – adjustable, automatic electronic current-limiting circuit limits output current to preset value. Current-limiting setability to 105% of rated current via front panel adjust.

Overvoltage Protection
Built-in, adjustable overvoltage protection is standard on all sets. AC power must be recycled to restore operation.

In-rush Limiting Circuit
Limits in-rush current at turn-on to 200% of full load peak current.

Remote Sensing
Provision is made for remote sensing to eliminate effect of power output lead resistance on DC regulation.

Remote On/Off
Isolated terminals on LT-860 Series allows for these remote functions: Turn-on – Logic zero, short circuit or open circuit; Turn-off – provide 5mA into ± R terminals. TTL compatible high will shut down the set. TTL low, short or open will turn on the set.

Operating Temperature Range
Continuous duty from 0°C to 71°C with appropriate deratings from 40°C to 71°C.

Storage Temperature Range
−55°C to +85°C.

Cooling
Fan cooled.

DC Output Controls
Coarse and fine voltage adjust and single current adjust on front panel.

Overvoltage Protection
Overvoltage trip point set by screwdriver adjust on front panel.

Power
On-off switch on front panel of LT-800 Series. On-off circuit breaker on front panel of LT-820, LT-860 Series.

Input and Output Connections
Heavy duty barrier strips for AC input, ground and sensing. DC output via bus bar at rear of chassis.

Meters
Digital panel meter standard on LT-800, 820 Series. Monitors output voltage/current by means of a volt/amp selector switch on LT-800 Series. Separate digital panel meters on LT-820 Series allow simultaneous monitoring of output voltage and current. Separate analog meters on LT-860 Series provides for simultaneous monitoring of output voltage and current.

LED Status Indicators
An overvoltage/overtemperature indicator lamp will light to notify the user of the occurrence of either an overvoltage or overtemperature shutdown condition. AC power must be removed from the unit to reset the power supply and the light. A line fault indicator with automatic reset indicates power loss or loss of a phase on LT-860 Series.

Physical Data

Package Model	Lbs. Net	Lbs. Ship	Size Inches
LT-800 Series	30	37	5 3/16 × 8 3/8 × 19 3/16
LT-820 Series	70	82	5 3/16 × 19 × 16 1/2
LT-860 Series	60	72	5 3/16 × 19 × 17 1/2

Options
AC Input

Series Model	Add Suffix	For Operation at:	Price
LT-800	–V1	205 to 265VAC 47-63Hz	12%
LT-820	–V1	207 to 253VAC 47-63Hz	12%

Accessories
For rack adapters and other accessories see page 152.

Guaranteed For 5 Years
5 year guarantee includes labor as well as parts. Guarantee applies to operation at full published specifications at end of 5 years.

Test, Systems and Laboratory Ratings Table

LLS-GPIB SERIES
- Stand-Alone IEEE-488 Power Supply
- Constant Voltage/Current
- Up to 100A, Up to 120V, Up to 800W
- Digital Keypad for Benchtop Use

LT SERIES
- 35% Smaller, 80% Lighter Than Equivalent 4KWSCR Supplies
- Lower Cost

LLS SERIES
- 50% Smaller Than Equivalent Models
- Digital Keypad for Precise Control
- Benchtop or 19" Rack Mount

MAX CURRENT (AMPS) AT AMBIENT TEMPERATURE OF 40°C	50°C	60°C	71°C	COMPLETE ELEC. SPEC. PG.	UNIT PRICE PER DELIVERED QUANTITY 1	10	25	MODEL
LT SERIES								
0-7.5 V OUTPUT								
150.0	135.0	115.0	89.0	130	$2205	$2100	$2016	LT-801
300.0	266.0	218.0	160.0	130	3498	3332	3198	LT-821
500.0	450.0	400.0	325.0	130	3697	3515	3333	LT-861
0-18 V OUTPUT								
70.0	61.0	52.0	40.0	130	2205	2100	2016	LT-802
150.0	133.0	109.0	80.0	130	3498	3332	3198	LT-822
225.0	205.0	180.0	145.0	130	3697	3515	3333	LT-862
0-36 V OUTPUT								
34.5	30.5	26.0	20.0	130	2205	2100	2016	LT-803
80.0	71.0	58.0	42.0	130	3498	3332	3198	LT-823
115.0	104.0	92.0	75.0	130	3697	3515	3333	LT-863
0-60 V OUTPUT								
21.5	19.0	16.0	12.5	130	2205	2100	2016	LT-804
50.0	43.0	35.0	25.0	130	3498	3332	3198	LT-824
70.0	63.0	56.0	45.0	130	3697	3515	3333	LT-864

Note: Maximum output current applies over entire voltage range.

LT SERIES MECHANICAL DRAWINGS

LT-800 Series

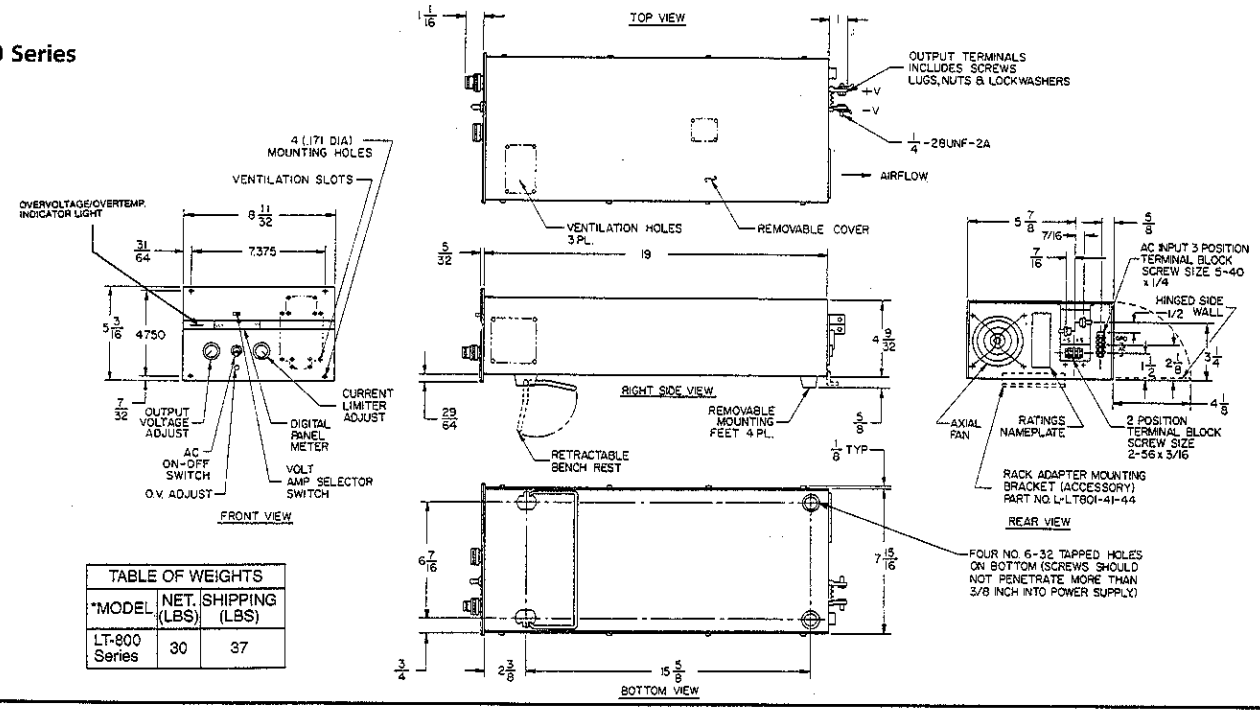

TABLE OF WEIGHTS		
*MODEL	NET. (LBS)	SHIPPING (LBS)
LT-800 Series	30	37

LT-820 Series

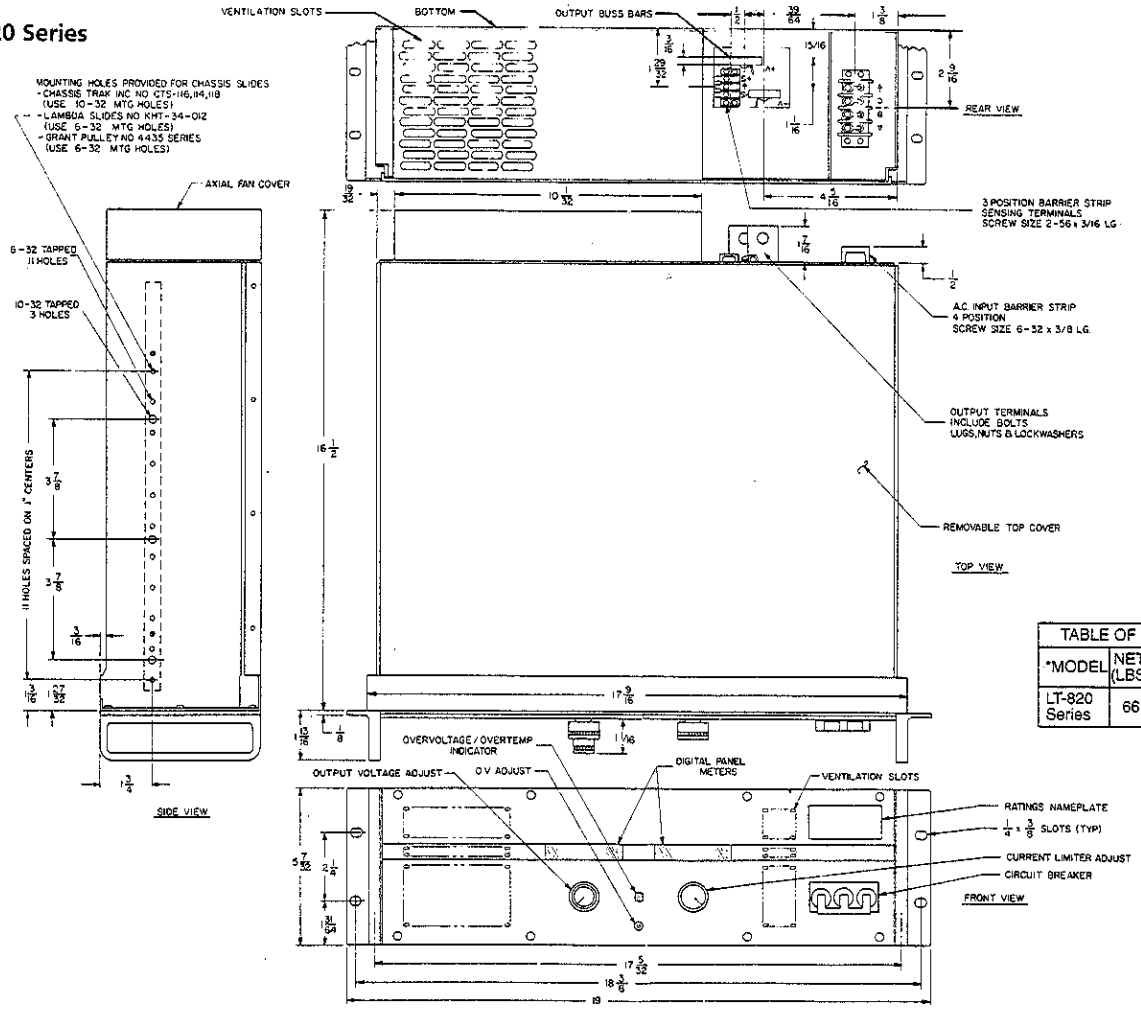

TABLE OF WEIGHTS		
*MODEL	NET. (LBS)	SHIPPING (LBS)
LT-820 Series	66	78

LT SERIES MECHANICAL DRAWINGS

LT-860 Series

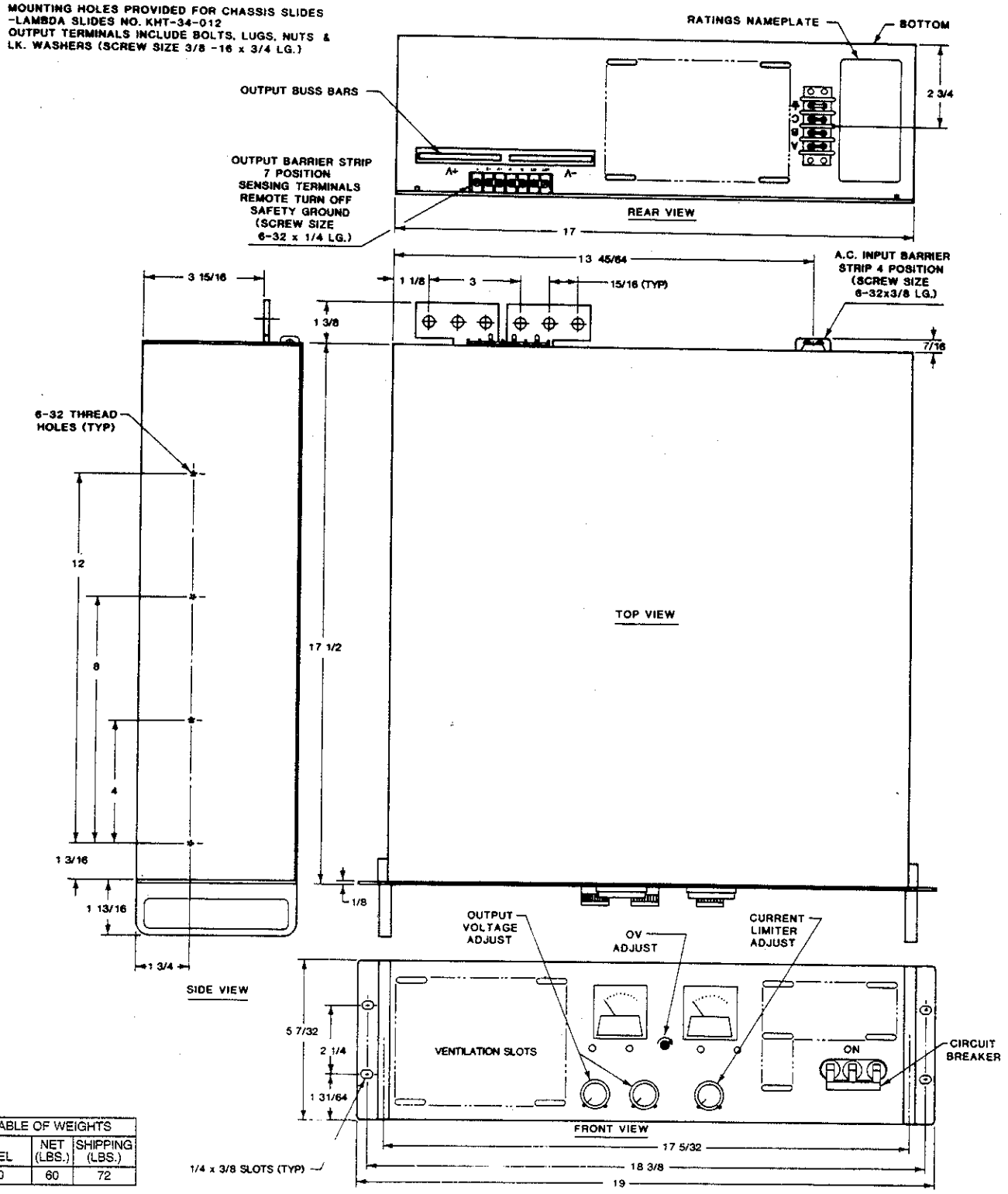

TABLE OF WEIGHTS		
MODEL	NET (LBS.)	SHIPPING (LBS.)
LT-860	60	72