Digital I/O, 24 or 96 Lines, 5 V TTL/CMOS

NI 650x

- 24 or 96 digital input/output lines
- 5 V TTL/CMOS
- 2-wire handshaking capability
- Known power-up states
- NI-DAQ driver simplifies configuration and measurements

Models

- NI PCI-6503
- NI DAQCard-DIO-24
- NI PC-DIO-24
- NI PCI-DIO-96
- NI PXI-6508
- NI PC-DIO-96

Operating Systems

- Windows 2000/NT/XP
- Real-time performance with LabVIEW (see page 134)
- Others such as Linux and Mac OS X (see page 187)

Recommended Software

- LabVIEW
- LabWindows/CVI
- Measurement Studio

Other Compatible Software

- Visual Basic
- C/C++, C#

Driver Software (included)

- NI-DAQ 7

Family	Bus	Digital I/O Lines	Device Type	Logic Level	Isolation	Handshaking I/O	8255 Chipset	Change Notification	Pattern Matching
NI 6503	PCI PCMCIA ISA	24	Software timed	5 V TTL/CMOS	–	✓[1]	✓	–	✓
NI 6508	PCI PXI ISA	96 –	Software timed	5 V TTL/CMOS	– –	✓[1] ✓[1]	✓ ✓	– –	✓ ✓

[1]Handshaking supplied by the 8255; only one handshaking mode is available.

Table 1. NI 650x Specifications Overview (See page 385 for detailed specifications.)

Overview and Applications

NI 6503 devices are 24-bit parallel DIO interfaces for PCI, PCMCIA, and ISA. NI 6508 devices offer 96-bit parallel DIO interfaces for PCI, PXI, and ISA. All NI 650x devices are designed for 5 V TTL/CMOS I/O signals.

Hardware

82C55 Parallel Port Interfaces

NI 650x devices use 82C55 Parallel Port Interfaces (PPIs). NI 6503 devices contain one PPI, and the NI 6508 devices contain four. Each PPI controls 24 bits of DIO and has three 8-bit ports (A, B, and C). You can configure each port as either input or output. Ports A and B are always used for digital data I/O, while port C can be configured for digital data I/O, control, status, or handshake signals.

Digital I/O Power-Up State Selection

You can power up the PCI-6503, PC-DIO-24, PC-DIO-96, and PXI-6508 DIO lines in a user-defined state – either high or low. On these devices, each line is connected to a 100 kΩ resistor, and you can use a jumper to select whether the lines of the device power up in the high or low state. The DAQCard-DIO-24 and PCI-DIO-96 have 100 kΩ resistors that always pull high.

Digital I/O Connector

Digital connectors for the NI 650x devices are described in Table 2. The eight bits in Port A of each PPI are at xPA7 through xPA0 on the digital I/O connector where x represents which PPI is being used. Ports B and C are at xPB7 through xPB0 and xPC7 through xPC0, respectively. Each port is programmed to be input or output. Power from the computer I/O channel is also available on the DIO connector. See page 381 to learn more about connectivity solutions, including direct connectors, electromechanical relay devices, and other signal conditioning solutions.

Device	Connector
PCI-6503 PC-DIO-24	50-pin, shown in Figure 3
DAQCard-DIO-24	27-pin; cable adapts it to the 50-pin connector shown in Figure 3
NI 6508	100 pin; shown in Figure 2

Table 2. NI 650x Connector Overview

Digital I/O, 24 or 96 Lines, 5 V TTL/CMOS

Driver Software

With NI-DAQ driver software, you can interactively configure your devices, write custom programs, and easily perform digital I/O. You can also use messaging so when an input port matches or mismatches a user-defined pattern, NI-DAQ can perform another programmed operation. This process eliminates polling, decreases the load on the CPU and bus, and improves the efficiency of the system. NI-DAQ also provides numerous example programs for LabVIEW and other ADEs to quickly get you started with your application.

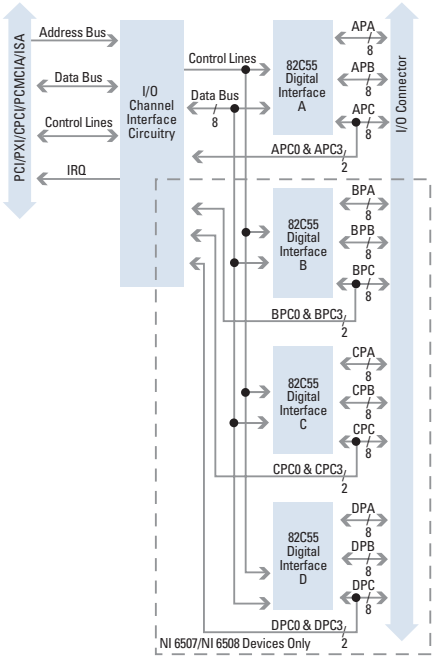

Figure 1. NI 650x Hardware Block Diagram

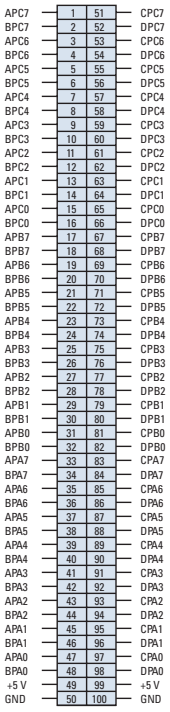

Figure 2. NI 6508 I/O Connector

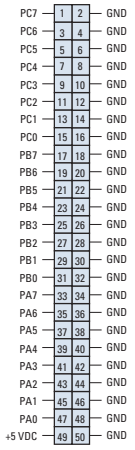

Figure 3. NI 6503 I/O Connector

Ordering Information

NI PCI-6503 777690-01
NI DAQCard-DIO-24.....776912-01
NI PC-DIO-24 777368-01
NI PCI-DIO-96 777387-01
NI PXI-6508 777598-01
NI PC-DIO-96 777271-01
Includes NI-DAQ driver software

For information on extended warranty and value-added services, see page 20.

Recommended Configurations

Family	Device	Accessory	Cable
NI 6503	PCI-6503	CB-50LP (777101-01)	NB1 (180524-10)
	DAQCard-DIO-24	CB-50LP (777101-01)	PSH27-50F-D1 (776989-01)
	PC-DIO-24	CB-50LP (777101-01)	NB1 (180524-10)
NI 6508	PCI-DIO-96	SCB-100 (776990-01)	SH100-100-F (185095-02)
	PXI-6508	SCB-100 (776990-01)	SH100-100-F (185095-02)
	PC-DIO-96	CB-100kit (776455-02)	Included in kit

See page 382 for accessory and cable information.

BUY ONLINE!

Visit ***ni.com/info*** *and enter pci6503, daqcarddio24, pcdio24, pcdio96, pxi6508, or pcdio96.*

Digital I/O Connectivity and Signal Conditioning

Cables, Connector Blocks, and Signal Conditioning

Choose your Digital I/O cables, connector blocks, and signal conditioning in two easy steps.

Step 1. Choose your connector block and cable. (see digital I/O accessories section for details)

Device	Connector Block	Cables
PCI-6527, PXI-6527	CB-100 Kit SCB-100 CA-1000, CB-50, CB-50LP	Kit includes R1005050 cable SH100-100-F R1005050 (splits into two 50-pin connectors); with this cable, you can use two accessories from this group with one NI 6527 device
PCI-6503, PC-DIO-24	CA-1000, CB-50, CB-50LP	SH50-50 or NB1
DAQCard-DIO-24	CA-1000, CB-50, CB-50LP	PSH27-50F-D
PCI-DIO-96, PXI-6508	CB-100 Kit SCB-100 CA-1000, CB-50, CB-50LP	Kit includes R1005050 cable SH100-100-F NB5 (Splits into two 50-pin connectors); with this cable, you can use two accessories from this group with each device.
PC-DIO-96	CB-100 Kit SCB-100 CA-1000, CB-50, CB-50LP	Kit includes NB5 cable SH100-100-F NB5 (Splits into two 50-pin connectors); with this cable, you can use two accessories from this group with each device.

Step 2 (Optional). Choose your signal conditioning hardware and enclosures.

Device	SCXI Signal Conditioning System (Page 270)	SSR Series Modules (Page 349)	SC-206x Device (Page 349)	ER-8, ER-16 Electromechanical Relays (Page 349)	CA-1000 Custom Connectivity Enclosure (Page 351)
PCI-6527	–	–	–	–	✓
PXI-6527	–	–	–	–	✓
PCI-DIO-96	✓	✓	✓	✓	✓
PXI-6508	✓	✓	✓	✓	✓
PC-DIO-96	✓	✓	✓	✓	✓
PCI-6503	✓	✓	✓	✓	✓
PC-DIO-24	✓	✓	✓	✓	✓
DAQCard-DIO-24	✓	✓	✓	✓	✓

Digital I/O Accessories and Cables

Figure 1. SCXI High-Performance Signal Conditioning

Figure 2. Digital Signal Conditioning Accessories

Figure 3. CA-1000 Configurable Signal Connectivity Solution

Figure 4. SCB-100 Shielded Connector Blocks

Figure 5. CB-50 I/O Connector Block

Accessories for Digital I/O

SCXI – High-Performance Modular Signal Conditioning (See Figure 1)

SCXI is a modular high-performance signal conditioning system that serves as a front end to your DIO device. The SCXI modules for DIO offer isolation, extended voltage ranges (up to 250 Vrms), increased current switching capabilities, and expanded channel counts (up to 3,072 I/O lines). In addition to SCXI modules for DIO, your SCXI signal conditioning system can include modules for analog output and general-purpose switching when cabled to a DIO device. With SCXI, you can create integrated, flexible high-channel-count measurement systems with signal conditioning components tailored to your needs. See page 270 for details on SCXI signal conditioning.

SCC – Portable Modular Signal Conditioning

National Instruments offers SCC modules for portable low-channel-count digital signal conditioning. These modules mount in a compact, versatile carrier. See page 251 for details on SCC signal conditioning.

Digital Signal Conditioning Assessories (See Figure 2)

National Instruments also offers several options for low-channel-count digital signal conditioning. These accessories provide a cost-effective solution for digital I/O systems requiring isolated I/O or relays for controlling external devices. Most of these products cable directly to your National Instruments digital I/O device. See page 349 for details on digital signal conditioning accessories.

CA-1000 (See Figure 3)

Configurable signal connectivity solution for connecting DIO devices to different types of standard I/O connectors and for incorporating switches and LED indicators. You can place this connector box under a laptop PC, on a benchtop, or in a 19 in. rack.

CA-1000 .....See page 351

Dimensions – 30.7 by 25.4 by 4.3 cm (12.1 by 10 by 1.7 in.)

SCB-100 (See Figure 4)

Shielded I/O connector block for easy connection of I/O signals to 100-pin digital I/O devices. The screw terminals are housed in a metal enclosure for protection from noise corruption. Combined with shielded cables, the SCB-100 provides rugged, very low noise signal termination. It also includes general breadboard areas – three on the SCB-100.

SCB-100.....776990-01

Dimensions – 19.5 by 15.2 by 4.5 cm (7.7 by 6.0 by 1.8 in)

CB-50 I/O Connector Block with DIN-Rail Mounting (See Figure 5)

Termination accessory with 50 screw terminals for easy connection of field I/O signals to NI 650x and NI 6527 devices. Includes one 50-pin header for direct connection to 50-pin cables. The CB-50 includes a protective plastic base and hardware for mounting the accessory on either a standard DIN rail or flush on a wall or panel.

CB-50.....776164-90

Dimensions – 13.5 by 7.3 cm (5.3 by 2.9 in.)

Digital I/O Accessories and Cables

CB-50LP I/O Connector Block (See Figure 6)

Termination board with 50 screw terminals for easy connection of field I/O signals to NI 650x and NI 6527 devices. Includes one 50-pin header for direct connection to 50-pin cables. The CB-50LP includes metal standoffs for use on a desktop or for mounting on a custom panel.

CB-50LP.....777101-01

Dimensions – 13.26 by 7.19 cm (5.22 by 2.83 in.)

Figure 6. CB-50LP I/O Connector Block

CB-100 I/O Connector Kit (See Figure 7)

The first CB-100 kit includes two CB-50 I/O connector blocks and an R1005050 ribbon cable for connecting to a PCI-6527, PXI-6527, PCI-DIO-96, PXI-6508 device. The second CB-100 kit includes two CB-50 I/O connector blocks and/or an NB5 ribbon cable for direct connection to a PC-DIO-96 device. Each CB-50 block includes hardware for mounting the accessory on a standard DIN-rail or panel.

CB-100 with 1 m R1005050 cable 777812-01

CB-100 with 1 m NB5 cable.....776455-02

Figure 7. B-100 I/O Connector Kit

RTSI Bus Cables

Use RTSI bus cables to connect timing and synchronization signals among measurement, vision, motion, and CAN boards for PCI and ISA. For systems using both long and short boards, order the extended RTSI cable.

2 boards 776249-02

3 boards 776249-03

4 boards 776249-04

5 boards 776249-05

Extended, 5 boards 777562-05

Figure 8. H50-50 Shielded Cable

SH50-50 (See Figure 8)

Shielded 50-conductor cable that connects to a PCI-6503 or PC-DIO-24 device and terminates with a 50-pin connector. The kit includes the shielded cable and a 3 in. ribbon cable for connection flexibility.

1 m 777720-01

2 m 777720-02

SH100-100-F (See Figure 9)

Shielded 100-conductor cable that connects to a PCI-6527, PXI-6527, PCI-DIO-96, PXI-6508, or DAQPad-6508 and terminates with a 100-pin 0.050 series D-type connector that attaches directly to 100-pin accessories.

2 m 185095-02

Figure 9. SH100-100-F Shielded Cable

PSH27-50F-D1 for DAQCard-DIO-24

Shielded cable that connects to the DAQCard-DIO-24 and is terminated with a 50-pin female connector that attaches directly to 50-pin accessories.

0.5 m 776989-0R5

1 m 776989-01

Digital I/O Accessories and Cables

Figure 10. R1005050 Ribbon Cable

Figure 11. NB1 Cable

Figure 12. NB5 Cable

Figure 13. PCB Mounting Connectors

Figure 14. PCMCIA Strain-Relief Accessory

Ribbon Cables

R1005050 (See Figure 10)

Ribbon cable that connects to a PCI-6527, PXI-6527, PCI-DIO-96, PXI-6508 and is terminated with two 50-pin IDC connectors.

1 m 182762-01
2 m 182762-02

NB1 Cable (See Figure 11)

50-conductor ribbon cable that connects any device with a 50-pin connector to 50-pin connector accessories.

1 m 180524-10
2 m 180524-20

NB5 Cable (See Figure 12)

100-conductor ribbon cable that connects to a PC-DIO-96 device (100-pin connector) and is terminated with two 50-pin connectors.

1 m 181304-10
2 m 181304-20

PCB Mounting Connectors for Custom Accessories (See Figure 13)

PCB connectors for use in building custom accessories that connect to 100-conductor shielded and ribbon cables. Two types of connectors are available, one for right-angle and one for vertical mounting onto a PCB.

100-pin, female, right-angle mounting 777778-01
100-pin, female, vertical mounting.....777779-01

PCMCIA Strain-Relief Accessory (See Figure 14)

Accessory that attaches to the bottom of your notebook computer and provides adjustable strain relief for one or two PCMCIA cables attached to the installed PCMCIA card(s).

PCMCIA strain-relief accessory 777550-01

Digital I/O Overview

Digital input/output (DIO) devices are used in a wide variety of applications from automotive design, industrial factory automation, and machine control, to aerospace, laboratory research, and biomedical applications. You can connect NI digital I/O devices to limit and proximity switches, photoelectric sensors, level gauges, pressure switches, gas detectors, pumps, motors, solid-state relays, electromechanical relays, digital data buses, and more.

NI DIO devices can be installed in traditional desktop computers using the PCI or ISA bus, connected via USB port, or installed in laptop computers with PCMCIA slots. For the utmost in reliability and mechanical ruggedness, NI also offers PXI digital I/O devices suitable for operation in the LabVIEW Real-Time environment.

Choose Your Digital I/O Hardware

Isolation

Isolation physically and electrically separates two parts of a circuit and provides several advantages. It breaks ground loops, improves common-mode voltage and noise rejection, and it permits two parts of the circuit to be at different voltage levels. Isolation protects both computer circuitry and human operators. Industrial applications often require isolation to protect the electronics from transient voltage spikes and to provide greater common-mode noise rejection in electrically noisy environments containing machinery and inductive loads.

In the case of channel-to-channel isolated I/O, each channel has its own ground terminal. In bank-to-bank isolated devices, each bank (or group) consists of several channels that share the same ground but are isolated from other banks. NI 6527 devices provide 60 VDC of built-in channel-to-channel isolation between each I/O channel.

Signal Conditioning

For even higher isolation levels, NI 650x devices can be connected to SCXI-116x signal conditioning modules to provide 450 V_{rms} of bank-to-bank isolation. For lower channel counts, the SC-206x accessories provide eight optically isolated inputs or outputs with 400 V_{rms} of channel-to-channel isolation. Another option is SSR modules, which provide 4000 V_{rms} of channel-to-channel isolation in 8, 16, 24, or 32-channel backplanes. For electromechanical relay outputs, the ER-8 and ER-16 accessories and eight channel SC-2062 enclosure are available. Refer to Table 3 for signal conditioning accessory catalog page numbers.

		Product Families		
Application	Mode of Operation	NI 653x High-Speed DIO (p.432)	NI 6527 Isolated DIO (p. 377)	NI 650x Low-Cost DIO (p. 379)
Perform basic digital I/O	Software timed	✓	✓	✓
Transfer data with fixed timing between points	Hardware timed	✓	–	–
Transfer data where both the device under test and measurement device can pause the transfer	Handshaking I/O	✓	–	✓[1]
Run a user-defined software routine when a user-defined DIO event occurs	Change Notification and Pattern Matching	✓	✓	✓

[1]Handshaking supplied by the 8255; only one handshaking mode is available. See individual product details on the following pages for more information. See page 376 for details.

Table 2. Digital I/O Applications.

Tech Tip

Q: I would like to perform high-speed buffered digital I/O controlled by an external or internal digital clock or handshaking signal. Which digital I/O device do you recommend?

A: For high-speed buffered pattern I/O or handshaking I/O, see the hardware-timed NI 653x devices on page 432.

Accessory	Description	Page
SCXI	Signal conditioning system	270
SSR Series	Digital signal conditioning modules	321
SC-206x	Digital signal conditioning modules	349
ER-8/16	Electromechanical relays	349
CA-1000	Configurable connector accessory	351
SCB-100	Shielded connector block	382
CB-50	I/O connector block	382
CB-50LP	I/O connector block	383
CB-100 kit	I/O connector block kit; includes cable	383

For complete and up-to-date information about accessories, visit ***ni.com/catalog***

Table 3. Digital I/O Signal Conditioning Accessories.

Family	Product	Bus	Digital I/O Lines	Logic Level	Isolation	Handshaking I/O[1]	Change Notification	8255 Chipset	Pattern Matching	Page
NI 6527	PCI-6527 PXI-6527	PCI PXI	24 inputs and 24 outputs	28 V input and 60 V output	✓	–	✓	–	–	377
NI 6507 NI 6508	PCI-DIO-96 PXI-6508 PC-DIO-96 DAQPad-6507/6508	PCI PXI ISA USB	96	5 V TTL/CMOS	–	✓	–	✓	✓	379
NI 6503	PCI-6503	PCI								
	DAQCard-DIO-24	PCMCIA	24	5 V TTL/CMOS	–	✓	–	✓	✓	379
	PC-DIO-24	ISA								

[1]Handshaking supplied by the 8255; only one handshaking mode is available. See page 376 for details.

Table 1. Digital I/O Products Specifications Summary (See page 385 for detailed specifications.)

Digital I/O Overview

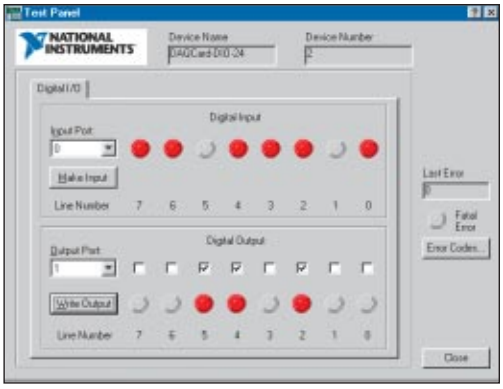

Figure 1. Test DIO device hardware and signal connections using a Measurement & Automation Explorer test panel.

Connectivity

For shielded screw-terminal connections to your NI 6527 or NI 6508 device, use the SCB-100 connector block and shielded SH100-100-F cable. Unshielded connector blocks and cables are also available, such as the CB-100 kit which includes an unshielded ribbon cable. For custom connectivity, the CA-1000 accessory enclosure can be used for convenient connection to pushbutton/rocker switches, banana jack cables/probes, and LED indicators. Refer to Digital I/O Accessories and Cables on page 382 for more details and options.

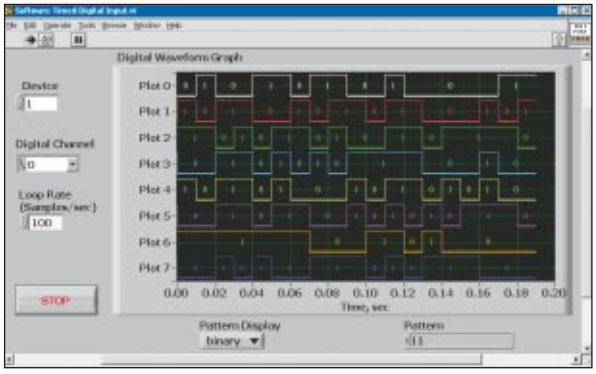

Figure 2. You can use LabVIEW to create powerful DIO applications. This figure represents the graphical user interface of a software timed DIO application on an NI 650x device. See page 43 for more information about LabVIEW.

Voltage Levels

For laboratory and test and measurement applications, the most commonly used logic levels are 5 V TTL and TTL-compatible CMOS. In industrial control applications, 24 V levels with isolation are common and digital I/O devices may include electromagnetic relays, motor controls, switches, valves, or pumps.

NI offers digital logic levels from nonisolated 5 V TTL/CMOS on NI 650x devices, up to 28 V input and 60 V output on NI 6527 devices. NI 6527 devices also offer channel-to-channel optical isolation and higher current switching capability on the outputs (120 mA). For even higher voltage and isolation levels, the NI SCXI-1162, SCXI-1162HV, and SCXI-1163 modules provide signal conditioning from 5 V TTL/CMOS up to 240 VAC/VDC in optically isolated banks of four lines each.

Software-Timed Digital I/O

Software-timed digital I/O, also referred to as unstrobed or static digital I/O, implies that the writing to digital output lines and reading from digital input lines is performed by software command. A single write or read operation is performed with each software command. Depending on the voltage and current requirements, you can use either NI 650x or NI 6527 software-timed devices to monitor and control switches, relays, actuators, annunciators, fans, lights, and motors. The maximum speed for software-timed digital I/O operations depends on the computer processor speed, communication bus, and operating system. For highest performance and greatest determinism in the timing of your software-timed digital I/O, use a PXI system running LabVIEW Real-Time.

Tech Tip

Q: I am controlling digital lines and relays, and I need to set the power-up states of each line in software. Can I do this?

A: You can do this with the NI 6527 isolated digital I/O devices. You can configure the power-up state of each output line independently with a utility in the Developer Zone. For more information, see page 377 or visit ***ni.com/info*** and enter ex95u3.

Digital I/O Overview

Hardware-Timed Digital I/O

Hardware-timed digital I/O, also referred to as high-speed digital I/O, implies that the writing and reading of digital lines is controlled by an external or internally generated clock signal. The clock signal latches the digital data into or out of a buffer, which can be streamed at high speed to the computer. With hardware-timed digital I/O, software commands are similar to buffered data acquisition command and an array of data is passed with each read or write operation. NI 653x devices can be used in either a hardware-timed or a software-timed manner.

For more information on NI 653x devices see page 432.

Handshaking Digital I/O

Handshaking digital I/O refers to transfers of digital data between the digital I/O device and a peripheral. Both parties in the transfer control a handshaking line and can pause the operation if they are unable to keep up with the data rate. NI 650x devices offer 8255 Mode 2 bidirectional transfers at typical constant sustainable rates of 1 to 10 kbytes/s using a 233 MHz Pentium computer.

For more information on high-speed handshaking, see the NI 653x devices on page 432.

Power-Up States

Some applications require that the digital I/O device power up with a determined value on the data lines. This procedure ensures that equipment connected to the digital I/O device is not damaged during the time after power is applied and before the software application begins running. All NI digital I/O devices power up with a known state on the digital I/O lines, either logic high, logic low, or high impedance. NI 6527 devices offer software programmable power-up states on each line that can be configured using a software utility located in the Developer Zone.

For more information, visit ni.com/info and enter ex95u3.

Change Notification and Pattern Matching

To monitor digital lines without continuously polling their state, you can use Change Notification on NI 6527 devices to notify your application when one or more digital input lines changes from low to high, high to low, or both. You can configure NI 650x devices to provide pattern matching when the input lines on a port match a specific pattern. In a PXI LabVIEW Real-Time application, change notification and pattern matching can be used to deterministically trigger execution for high-reliability real-time event response.

NI offers a complete array of digital I/O products for connection to any digital data bus or device.