1.3 SPECIFICATIONS, ELECTRICAL

a) MAT Power Module Features And Specification

TABLE 1-1. MAT POWER MODULE FEATURES AND SPECIFICATIONS

PARAMETER	CONDITION	MAT POWER MODULE		
		1/3 RACK	2/3 RACK	FULL RACK
Input Voltage Range	USER SELECTABLE	105-125 VAC 210-250 VAC		
Input Current Max	115 VAC	7.0A	14.0A	21.0A
	230 VAC	3.5A	7.0A	10.5A
Input Frequency	RANGE	47-63 Hz		
Voltage/Current Adjust-ment Range	RANGES	0 to 100% of rating, by preprogrammed setting, within inherent resolution limits		
Programming Resolution	Voltage	0.024% Eo max (12 bits)		
	Current	0.024% Io max (12 bits)		
Programming Accuracy	Voltage	0.024% Eo max		
	Current	0.1% Io max		
Data Read Back Accuracy via Digital Bus	Voltage	0.1% Eo max		
	Current	0.12% Io max		
Source Effect	Voltage	0.001% Eo max		
	Current	0.005% Io max		
Load Effect	Voltage	0.002% Eo max		
	Current	0.024% Io max or 4 mA (whichever is greater)		
Time 8 Hour Drift	Voltage	0.01% Eo max		
	Current	0.02% Io max		
Temperature Coefficient/°C	Voltage	0.01% Eo max		
	Current	0.02% Io max		
Ripple & Noise	Voltage	rms: 0.001% Eo max or 0.3 mV (whichever is greater) p-p: 0.01% Eo max or 3 mV (whichever is greater)		
	Current	rms: 0.03% Io max p-p: 0.3% Io max		
Transient Recovery	Voltage	150 µsec to recover within 0.1% Eo max for 10% to 100% step in rated load current		
Temperature	Operating	0 to 50 °C		
	Storage	-20 to +70 °C		
Cooling		Built-in fan, air exhaust to rear		
Remote Sensing	Range	0.5 volts per lead (Provision for 4-terminal connection to load)		
DC Output Isolation	Voltage	500 Vdc		
Leakage Current	Output to chassis	5µA rms or 50µA p-p @ 115V a-c		
Series/Parallel Operation		Consult Kepco application engineering		
Output Display	3-1/2 digit LCD Panel Meter	Switch selectable voltage/current		
Indlcators	4 LEDs	Voltage and Current Mode,Output Enabled, Polarity Reversed		
Output Enable/Disable		Built in power and sensing relays controlled through IEEE 1118 bus		
Polarity Reversal		Built in power and sensing relays controlled through IEEE 1118 bus		

TABLE 1-1. MAT POWER MODULE FEATURES AND SPECIFICATIONS (CONTINUED)

PARAMETER	CONDITION	MAT POWER MODULE		
		1/3 RACK	2/3 RACK	FULL RACK
Protection	Overvoltage	Tracks program voltage, Crowbars output and turns off input		
	Overcurrent	Tracks program current, Crowbars output and turns off input		
	Overtemperature	Monitors heat sink temperature, Crowbars output and turns off input		
	Polarity Reversal	Built in diodes protect unipolar supply output		
	Power Loss	Detects loss of ac input power, disables output		
Source Connections		3-wire power entry, via user-configurable mating connector (supplied) and proper gage wires (not supplied)		
Load Connections		5-wire connection, via user-configurable mating connector (supplied) and proper gage wires (not supplied) DC Power Output: 2 wires Output Sense Terminals: 2 wires Ground: 1 wire		
Remote Control Signal Connections		Two 2-wire connections via user-configurable mating connector supplied and 22 AWG wire (not supplied). Connectors in parallel for daisy chaining multiple power supplies (full rack only).		
Dimensions		See Figure 1-2.		
Weight	LBS	33	60	75
Mounting	Front	Three 1/3 rack modules plug into RA 50. One 1/3 and one 2/3 rack modules plug into RA 51	One 1/3 and one 2/3 rack modules plug into RA 51	Full Rack mounts directly into 19 inch Rack
Filler Panels	For either RA 50 or RA 51	RFP 50-1: 1/3 Panel RFP 50-2: 2/3 Panel.		

1.4 DC OUTPUT RATINGS FOR 1/3, 2/3 AND FULL RACK MODULES

a) MAT Power Module DC Output Ratings 1/3, 2/3, and Full Rack Size - see Table 1-2

b) Output range:
1) Voltage mode: 0-100% of rated voltage
2) Current mode: 0-100% of rated current

TABLE 1-2. MAT POWER MODULES POWER OUTPUT RATINGS

MODEL	VOLTS (Range)	AMPS Range	POWER (Nominal)
360W MODULES-1/3 RACK SIZE-DC OUTPUT RATINGS			
MAT 6-32	0-6	0-32	192
MAT 15-20	0-15	0-20	300
MAT25-14	0-25	0-14	350
MAT 36-10	0-36	0-10	360
MAT 55-7	0-55	0-7	385
MAT 75-5	0-75	0-5	375
MAT 100-3.6	0-100	0-3.6	360
MAT 150-2.4	0-150	0-2.4	360
720W MODULES-2/3 RACK-DC OUTPUT RATINGS			
MAT 6-64	0-6	0-64	384
MAT 15-40	0-15	0-40	600
MAT25-28	0-25	0-28	700
MAT 36-20	0-36	0-20	720
MAT 55-14	0-55	0-14	770
MAT 75-10	0-75	0-10	750
MAT 100-7.2	0-100	0-7.2	720
MAT 150-4.8	0-150	0-150	720
1080W MODULES-FULL RACK-DC OUTPUT RATINGS			
MAT 6-100	0-6	0-100	600
MAT 15-60	0-15	0-60	900
MAT 25-42	0-25	0-42	1050
MAT 36-30	0-36	0-30	1080
MAT 55-20	0-55	0-20	1100
MAT 75-15	0-75	0-15	1125
MAT 100-10	0-100	0-10	1000
MAT 150-7	0-150	0-7	1050

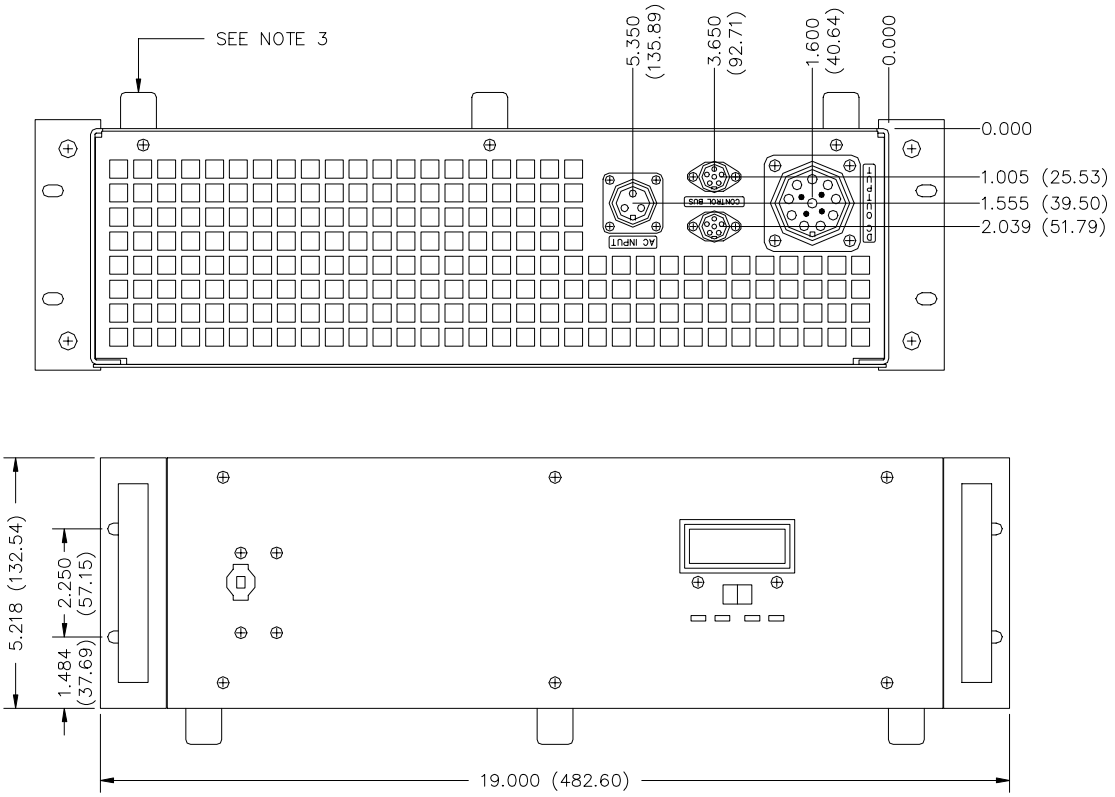

NOTES:

1. MATERIAL:
   A) CHASSIS: 0.090 THK. ALUM. 5052–H32.
   B) COVER: 0.064 THK. ALUM. 5052–H32.
   C) BACK COVER: 0.090 THK. ALUM. 5052–H32.
   D) FRONT PANEL: 0.090 THK. ALUM. 6061–T6.
   E) ANGLE BKT: 0.125 THK. ALUM. ANGLE 6063–T5.

2. FINISH:
   A) CHASSIS, COVER & BACK COVER: YELLOW IRIDITE.
   B) FRONT PANEL & ANGLE BKT: KEPCO GRAY, HARTIN PAINT #15–22493.

3. RACK OR CABINET MOUNTING: REMOVE (8) ALUM. FEET.

4. IF INSTALLATION WITHOUT SLIDES IS DESIRED, THE UNIT MUST BE SUPPORTED BY A RIGID PLATFORM.

5. DIMENSIONS IN PARENTHESES ARE IN MILLIMETERS.

6. TOLERANCES:
   A) BETWEEN MOUNTING HOLES: ±1/64(±0.4).
   B) ALL OTHER DIMENSIONS: ±1/32(±0.8) EXCEPT AS NOTED.

3041464

FIGURE 1-2. MAT POWER MODULE MECHANICAL OUTLINE DRAWING (SHEET 1 OF 2)

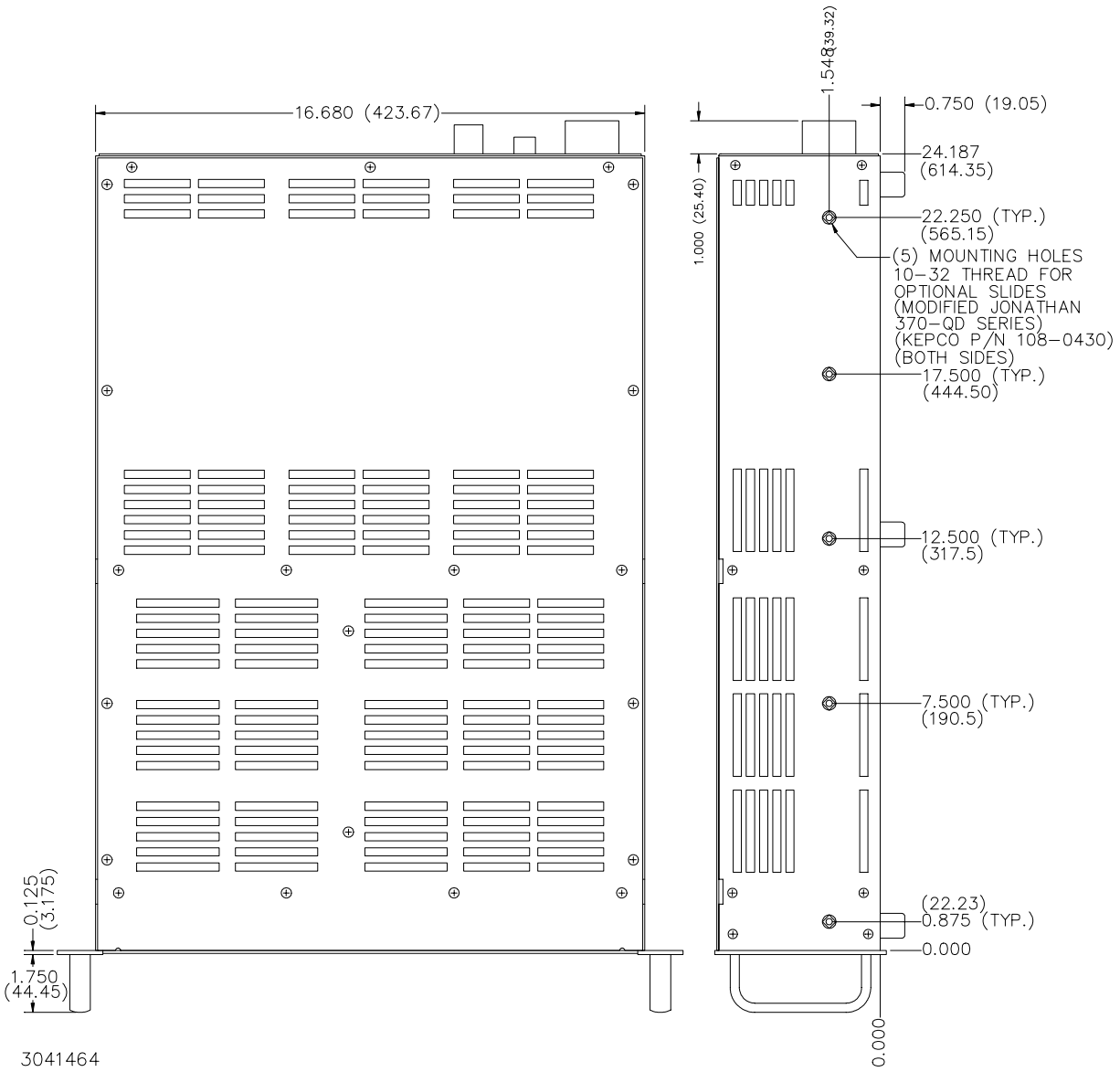

FIGURE 1-2. MAT POWER MODULE MECHANICAL OUTLINE DRAWING (SHEET 2 OF 2)

1.5 MISCELLANEOUS FEATURES

a. Mode flag: A pair of panel LED indicators indicate whether the Power Module is in voltage mode or in current mode.

b. Remote error sensing: Separate voltage-sensing terminals permit 4-wire connections to a load to compensate for static load effects (up to 0.5V per lead). An additional 1 volt output voltage, beyond the nominal voltage rating of each MAT Power Module, is provided for this purpose.

c. Storage temperature range: -20 to +70° C.

d. Cooling: The fans are high efficiency, single bearing fans with special low-noise non-metallic blades

1.6 ACCESSORIES

a. Kepco full rack MAT Models are drilled for optional chassis slides, Kepco P/N 108-0430 (modified Jonathan 370-QD Series), two required (see Figure 1-2).

b. One 2 meter long shielded twisted pair cable with two DIN mating connectors (see Table 2-5), one at each end (Kepco P/N 118-0699) is supplied with each Rack Adapter (RA 50 or RA 51) and with each Full Rack MAT Power Module. The Power Module Controller (see PAR. 1.2) and up to 27 MAT Power Modules can be connected in a daisy chain configuration as shown in FIG. 1-3. The last (in the daisy chain) Power Module Control Bus Outlet must be terminated with a Terminating Connector Assembly (Kepco P/N 195-0075) that is supplied with the Power Module Controller.

c. AC input connector (see Table 2-5).

d. DC Output connector (see Table 2-5).

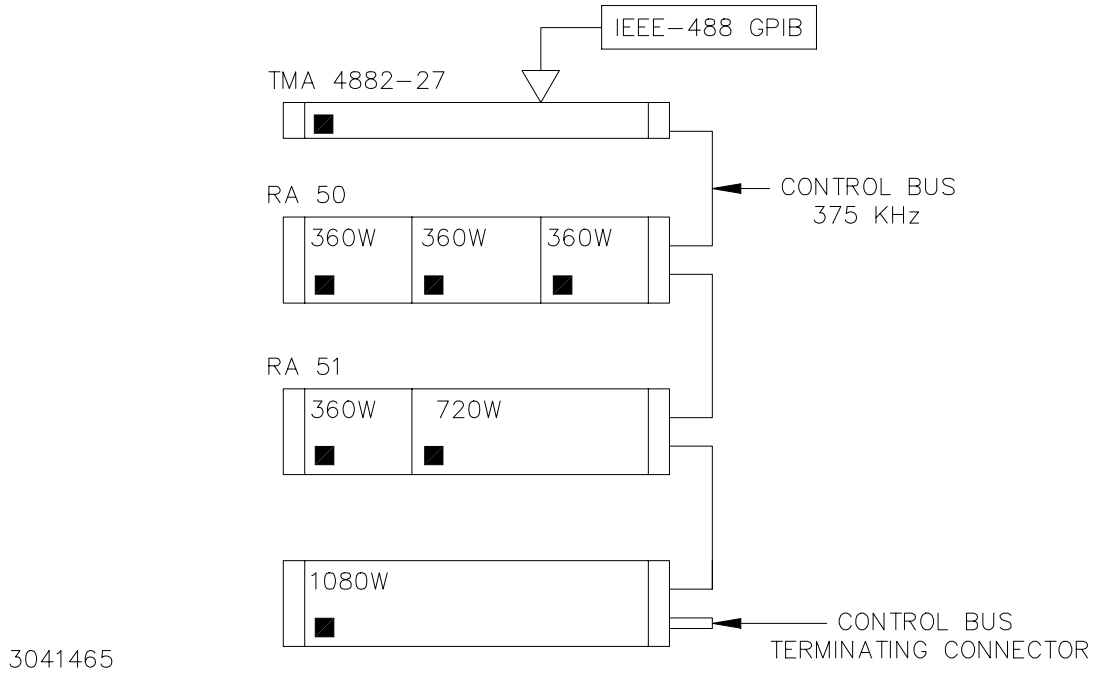

FIGURE 1-3. THE TMA 4882-27 CONTROLLER AND MAT POWER MODULES

1.7 SAFETY

There are no operator serviceable parts inside the case. Service must be referred to authorized personnel. Using the power supply in a manner not specified by Kepco. Inc. may impair the protection provided by the power supply. Observe all safety precautions noted throughout this manual. Table 1-3 lists symbols used on the power supply or in this manual where applicable.

TABLE 1-3. SAFETY SYMBOLS

SYMBOL	Meaning
	CAUTION: RISK OF ELECTRIC SHOCK.
	CAUTION: REFER TO REFERENCED PROCEDURE.
WARNING	INDICATES THE POSSIBILITY OF BODILY INJURY OR DEATH.
CAUTION	INDICATES THE POSSIBILITY OF EQUIPMENT DAMAGE.