Anritsu
Wiltron

54100A Series

Network Analyzers

1 MHz to 110 GHz

Technical Data Sheet

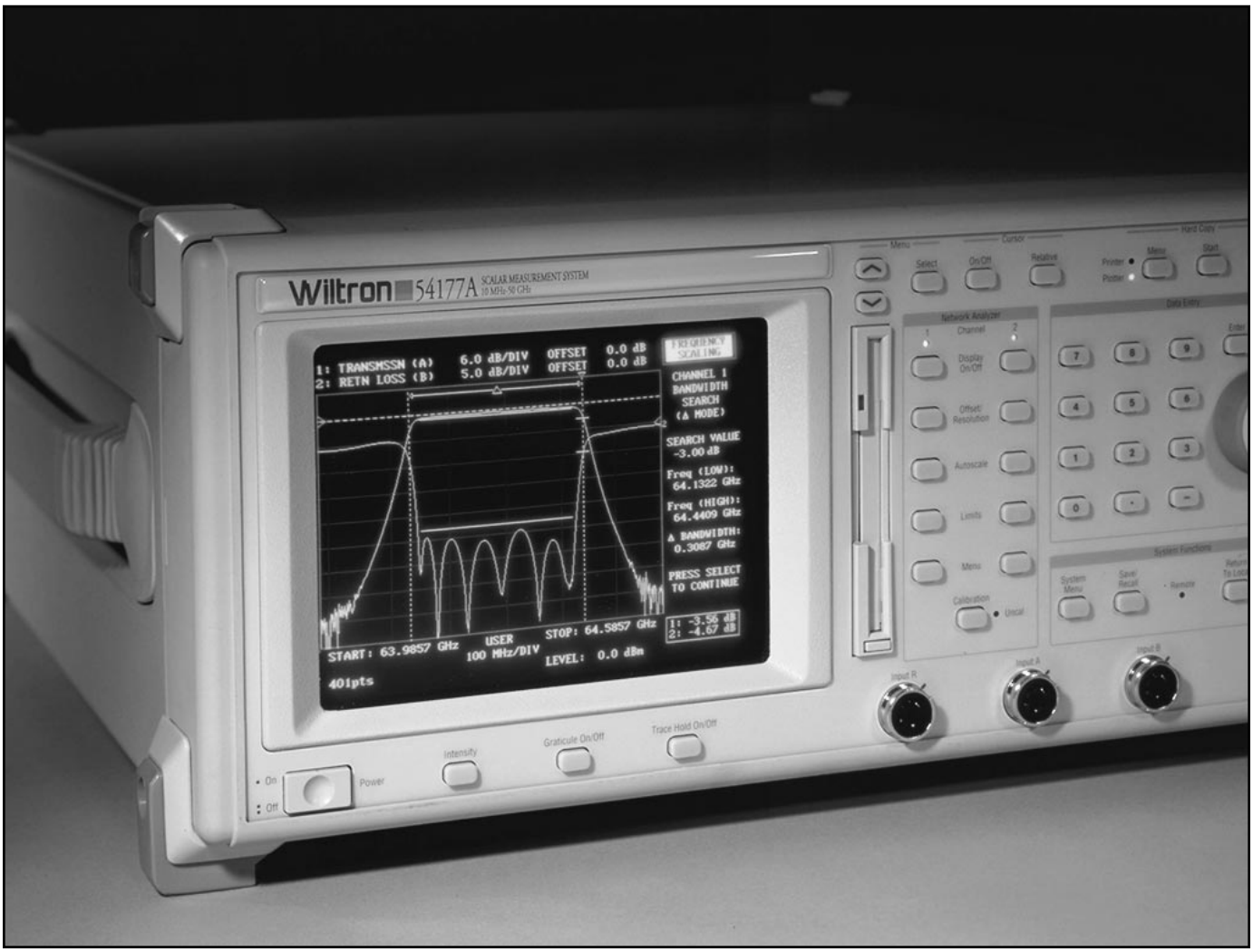

High Performance Solutions in an Economical Network Analyzer

MEASUREMENTS

The 54100A Series Network Analyzer include models and measurement components from 1 MHz to 110 GHz.

Measurement Modes: Transmission (dB), Relative Group Delay (ns), Return Loss (dB), Precision Return Loss (dB), SWR (linear SWR), Power (dBm), and optional Distance-To-Fault (feet or meters).

ANALYZER

Dynamic Range:
–55 dBm to +16 dBm, Autozeroing implements AC detection on a single cycle per sweep basis using Wiltron 560 Series or 5400 Series Detectors and SWR Autotesters. DC detection is used during the sweep to improve accuracy and avoid disturbing automatic leveling controls in the device under test. Auto-zeroing can be disabled.

Inputs: Three. Two standard inputs, A and B, with an optional third reference channel, R (Option 5). Wiltron 560 Series and 5400 Series Detectors and Autotesters are designed to operate with the 54100A Network Analyzer. For millimeter wave applications, the 5400 Series Multiplier/Reflectometers provide integrated reference and return loss detection.

Channels: Two channels are used to select and simultaneously display any two inputs from A, B, or R. The inputs can also be displayed as ratios A/R or B/R.

Display Resolution:
Horizontal: 51, 101, 201, or 401 points.
Vertical: 0.025 dB, 0.0025 ns

Graticule: Ten vertical divisions. Horizontal axis automatically scales in frequency increments of 1, 2, 5. Graticule On/Off button turns all graticule lines off. Tick marks remain on axis to indicate graticule position.

Vertical Scaling:
Resolution: 0.1 dB(m) to 10 dB(m) per division.
Independent control for each channel 0.1 to 100 ns per division.
Offset range: –99.9 dB to +99.9 dB, –99.9 to +99.9 ns.
Autoscale: Automatically selects offset and resolution to provide optimum display of test data.

External VGA Monitor Output: Rear panel connection is provided to drive a VGA color display. Trace colors are menu selectable.

Cursor: The numerical amplitude of the test data and frequency are displayed for both channels. Display range –99.9 to +99.9 dB or ns.

Relative Cursor: Displays the amplitude and frequency differences between the Cursor and Relative Cursor for both channels.

Cursor Functions: Automatic cursor searches for trace Maximum, Minimum, dB Level, dB Bandwidth, Next Marker, and Active Marker may be performed.

Display Data Correction: System frequency response errors are removed from measurements with a through-line transmission calibration and an open-short reflection calibration. Calibration data is stored at 0.002 dB resolution over the selected frequency range. Interpolation is used to maintain calibration as frequency sweep range is decreased.

Smoothing: Filtering, adjustable in five levels, to reduce noise and interference on low-level traces. Channels may be independently set.

Averaging: 2, 4, 8, 16, 32, 64, 128, or 256 successive traces may be averaged together to remove unwanted noise. Channels may be independently set.

Limit Lines: Two limit lines, either single value or multi-level segmented, for each trace. Complex lines may be made from up to 10 individually-editable segments.

Trace Mask: A swept measurement can be stored to a graticule Trace Mask for visual comparison to later measurements.

Save/Recall: Thirteen sets of front-panel set-ups and thirteen sets of trace memory can be stored in non-volatile instrument memory. Stored set-ups may be previewed on the CRT or printed prior to selection. Non-volatile memory can be erased for security purposes.

3.5 Inch DOS Disk Drive: Instrument configurations and trace data can be stored on a MS-DOS® compatible 3.5 inch, 1.44 MB floppy disk. Trace Data can be stored in a standardized ASCII format which easily reads into common PC spread sheets and word processing software.

SOURCE

Frequency Range: 1 MHz to 110 GHz. Contact Factory for special frequency range requirements.

Start-Stop: Sweeps from start frequency to stop frequency.

Center-Width: Sweeps from *center* – (*width/2*) to *center* + (*width/2*)

Alternate Sweep: Sweeps alternately between frequency ranges set differently for Channel 1 and Channel 2.

CW: Provides single frequency output (both channels turned off).

Frequency Resolution:
RF Models (54107A, 54109A, 54111A): ±10 kHz
Microwave Models: ±100 kHz

Start Frequency Accuracy:
RF Models (54107A, 54109A, 54111A): ±100 kHz
Microwave Models to 20 GHz: ±200 kHz
Microwave Models, 20 to 40 GHz: ±400 kHz
Microwave Models, 40 to 50 GHz: ±800 kHz

Sweep Time, Single Band: Typically less than 70 ms for single channel with 101 point horizontal resolution, depending on frequency, averaging, and smoothing settings. Trace update time is typically 130 ms with similar system settings.

Residual FM:

1 MHz to 20 GHz	< 10 kHz Peak
20 GHz to 40 GHz	< 20 kHz Peak
40 GHz to 50 GHz	< 40 kHz Peak

Measured in 30 Hz to 15 kHz post-detection BW.

Output Power: Maximum guaranteed leveled output power is model dependent. Typical unleveled output power exceeds the specified leveled output power. Operation with unleveled output power degrades rated specifications and is not recommended.

Reverse Power Protection: Up to 1 Watt.

Power Level Accuracy: ±1 dB, leveled. ±3.0 dB for models above 20 GHz, and ±4.0 dB for 50 GHz models. Add ±0.2 dB for Option 4–75 Ω output.

Power Level Accuracy, Attenuator: Optional 70 dB Step Attenuator (10 dB steps). Leveled power accuracy degrades by ±1.5 dB for models below 20 GHz and ±1.9 dB for 20 GHz models.

Power Level Control, Internally Leveled: Front panel control adjusts power over a 10 dB range (up to 20 dB in some models) or from –70.0 dBm to maximum leveled power when Option 2, 2A, 2B, 2C or 2D 70 dB Step Attenuator is installed.

Power Level Control, Externally Leveled (Option 6): Front panel control adjusts power range determined by external leveling detector output. Flatness determined by leveling detector and coupler characteristics.

Leveling (With External Detector): Levels output power at DUT input positions other than near the 54100A source output. A leveling detector tracks the RF power level by providing a positive or negative polarity detected signal of 30 to 200 mV to a rear panel BNC connector.

Leveled Power Variation:

1.0 MHz to 1.0 GHz	±0.3 dB	±1.0 dB, Opt 2
1.0 MHz to 2.0 GHz	±0.4 dB	±1.1 dB, Opt 2
1.0 MHz to 3.0 GHz	±0.6 dB	±1.3 dB, Opt 2
10.0 MHz to 20 GHz	±0.8 dB	±1.0 dB, Opt 2A
10.0 MHz to 26.5 GHz	±1.0 dB	±2.5 dB, Opt 2B
10.0 MHz to 32 GHz	±2.0 dB	±2.0 dB, Opt 2C
10.0 MHz to 40 GHz	±2.0 dB	±2.0 dB, Opt 2C
10.0 MHz to 50 GHz	±3.0 dB	±3.0 dB, Opt 2D

Add ±0.2 for 75 Ω sources

Markers: The numerical amplitude of the test data and frequency are displayed. Markers remain fixed at the set frequency, independent of displayed sweep frequency range.

APPLICATION FUNCTIONS

Application functions speed and ease the task of characterizing antennas, filters, amplifiers, and other microwave devices.

Min/Max Hold: Save the minimum and maximum values of successive sweeps or the combination of the two. Ideal for acquiring data on drift or gain variation against temperature.

Cursor Functions: Automatic cursor search updates the bandwidth, minimum, or maximum levels of the displayed trace, "X" dB above or below the min/max point, or a selected bandwidth. This function can be set to repeat continuously.

Compression Test Automation: Determines the gain compression point over the operating frequency range of an amplifier by successively incrementing the source power and measuring the amount of compression until a preset "X" dB limit is exceeded.

GPIB

Interface: IEEE-488.2 compliant interface with integrated GPIB Plotter Control is standard on all 54100A instruments. All front panel controls are GPIB-controllable except power on/off. Front panel configurable for instrument control or for control of GPIB plotter.

GPIB Indicators:

Remote: Operating on GPIB
Talk: Talking on GPIB
Listen: Listening on GPIB
SRQ: Sending a service request
Local Lockout: Indicates the front panel RETURN TO LOCAL pushbutton is disabled. The instrument is returned to local mode via GPIB.

PRINTER/PLOTTER

Plotter: The GPIB interface is compatible with HP 7440A, HP 7550, HP 7470A, and HP 7475A plotters. Display traces, markers, cursor, and graticule information can be plotted.

Printer: Parallel printer interface is compatible with the Canon BJ10-SX, BJ30 and most Epson FX-compatible printers.

Internal Print and Plot Buffer: A new test can be conducted while previously taken test data are being printed or plotted from the internal printer buffer.

PRINTERS & ACCESSORIES

Portable printers may be purchased locally or through Anritsu Wiltron. When purchased separately, a Centronics-to-Centronics Printer Interface Cable will be needed for operation with the 54100A.

Canon BJ10-SX Printer	2000-668
Extra Ink Cartridge	2000-669
Extra Battery	633-16
Extra Printer Interface Cable	800-430

PRINTER POWER SUPPLIES

UK - AD150, 240V	40-65
USA - AD150/120, 120V	40-66
Europe - AD150/220, 220V	40-67
Japan - AD150/100, 100V	40-68

INPUT/OUTPUT CONNECTIONS

Horizontal Sweep Ramp Output: 0 to +10 V nominal

GPIB: Connects 54100A to controller or plotter. Rear panel GPIB connector.

Parallel Printer (Centronics): Connects 54100A to printer. Rear panel.

VGA Output: Connects 54100A to external VGA color display (not supplied). Rear panel 15 pin "D" connector.

External Leveling: Option 6 adds external leveling capability. Levels output power at remote test position. (Rear panel BNC female connector).

GENERAL

Self Test: Performs a self test every time power is applied or when SELF TEST pushbutton is pressed. If an error is detected, a diagnostic code appears, identifying the cause and location of the error.

Temperature Range:
Operating: 0°C to +50°C
Storage: -40°C to +70°C

Electromagnetic Compatiblity: Complies with European Community requirements for CE marking

Power: 115V +10%/-20%, 230V +10%/–20%, 48-440 Hz, 300 VA maximum

Dimensions: 177 H x 426 W x 476 D mm + 51 mm for feet (7 H x 16.75 W x 18.75 D in. + 2.0 in. for feet)

Weight: Less than 18 kg (39 lb.), 54147A

TRANSIT CASE

760–183 Transit Case: Hard shell case with custom foam inserts and carrying handle for maximum protection of the 54100A.

54100A SERIES NETWORK ANALYZERS

Model	Frequency Range	Harmonic[2]	Non Harmonic	Source SWR[1] (Leveled)	Output Power[1]	Connector
54107A	0.001 to 1.5 GHz	–40 dBc	–60 dBc	< 1.5	12 dBm, 50 Ω 10 dBm, 75 Ω	N (f)
54109A	0.001 to 2.2 GHz	–40 dBc	–60 dBc	< 1.5	12 dBm, 50 Ω 10 dBm, 75 Ω	N (f)
54111A	0.001 to 3 GHz	–40 dBc	–60 dBc	< 1.5	12 dBm, 50 Ω 10 dBm, 75 Ω	N (f)
54117A	0.01 to 8.6 GHz	–60 dBc, > 2 GHz –40 dBc, ≤ 2 GHz	–60 dBc, > 2 GHz –50 dBc, ≤ 2 GHz	< 1.5	10 dBm, 50 Ω	N (f)
54147A	0.01 to 20 GHz	–60 dBc, > 2 GHz –40 dBc, ≤ 2 GHz	–60 dBc, > 2 GHz –50 dBc, ≤ 2 GHz	< 1.8	10 dBm, 50 Ω	N (f)
54161A	0.01 to 32 GHz	–60 dBc, 2-20 GHz –40 dBc, > 20 GHz –40 dBc, ≤ 2 GHz	–50 dBc, > 2 GHz –50 dBc, ≤ 2 GHz	< 1.8	4.0 dBm, 50 Ω	K (f)
54169A	0.01 to 40 GHz	–60 dBc, 2-20 GHz –40 dBc, > 20 GHz –40 dBc, ≤ 2 GHz	–50 dBc, > 2 GHz –50 dBc, ≤ 2 GHz	< 1.8	4.0 dBm, 50 Ω	K (f)
54177A	0.01 to 50 GHz	–60 dBc, 2-20 GHz –40 dBc, > 20 GHz –40 dBc, ≤ 2 GHz	–50 dBc, > 2 GHz –50 dBc, ≤ 2 GHz	< 2.0	1.0 dBm, 50 Ω	V (f)

[1] At 25° C, internally leveled. Attenuator Options 2 through 2C reduce output power specification by 3.0 dB; 2D, 4.0 dB. [2] Loaded at 50 Ω

Additional Models

54119A	2 to 8.6 GHz	N(f)
54128A	8 to 12.4 GHz	N(f)
54130A	12.4 to 20 GHz	N(f)
54131A	10 to 16 GHz	N(f)
54136A	17 to 26.5 GHz	K(f)
54137A	2 to 20 GHz	N(f)
54154A	2 to 32 GHz	K(f)
54163A	2 to 40 GHz	K(f)

Measurement System Options

Option 1	Rack Mounting with Slides
Option 2	70 dB RF Step Attenuator
Option 2A	70 dB, 20 GHz Step Attenuator
Option 2B	70 dB, 26.5 GHz Step Attenuator
Option 2C	70 dB, 40 GHz Step Attenuator
Option 2D	70 dB, 50 GHz Step Attenuator
Option 4	75 ohm source output. (Available to 3.0 GHz)
Option 5	Add Reference Channel
Option 6	Add External Leveling
Option 7	Internal Distance-To-Fault Software
Option 8	Relative Group Delay Software
Option 12	Add Front Panel Cover
Option 13	Add Front Mounted Handles
Option 16	+15 V DC Supply for Millimeter Wave Source Modules (Available with ≤ 20 GHz Models only)
Option 25	Maintenance Manual
Option 26	Extra Operation and GPIB Programming Manual
Option 33	Canon BJ10-SX Bubble Jet Printer

SWR AUTOTESTERS

The 5400 and 560 Series SWR Autotesters integrate a high directivity bridge, a detector, a low reflection stainless steel test port, a reference termination, and a connecting cable. The detected output signal is proportional to reflections from the test device connected to the test port.

RF Extender cables with moderate insertion loss used between the source output to the SWR Autotester input do not degrade Return Loss (SWR) measurement performance. A mating Open/Short is shipped with each SWR Autotester except 5400-67FF75. WSMA test port connectors are precision connections for improved measurement accuracy when testing devices with SMA connectors.

Maximum Input Power: +27 dBm

The 560-98C50 Convertible SWR Autotester improves test accuracy and reduces maintenance cost without using error prone test port adapters or connector savers.

SWR AUTOTESTERS

Model	Frequency Range	Directivity	Test Port			Input Connector
			Impedance	SWR	Connector	
5400-67FF75	0.01 to 1 GHz	40 dB	75 Ω	< 1.22	F (f)	BNC (f)
5400-6B50B	0.001 to 1.5 GHz	40 dB	50 Ω	< 1.13	BNC (m)	N (f)
5400-6BF50B	0.001 to 1.5 GHz	40 dB	50 Ω	< 1.13	BNC (f)	N (f)
5400-6B75B	0.001 to 1.5 GHz	40 dB	75 Ω	< 1.22	BNC (m)	N (f)
5400-6BF75B	0.001 to 1.5 GHz	40 dB	75 Ω	< 1.22	BNC (f)	N (f)
5400-6N50	0.001 to 3 GHz	40 dBc, < 3 GHz	50 Ω	< 1.08, ≤ 2 GHz < 1.11, > 2 GHz	N (m)	N (f)
5400-6NF50	0.001 to 3 GHz	40 dBc, < 3 GHz		< 1.08, ≤ 2 GHz < 1.11, > 2 GHz	N (f)	N (f)
5400-6N75	0.001 to 3 GHz	40 dBc, < 3 GHz	75 Ω	< 1.10, ≤ 2 GHz < 1.17, > 2 GHz	N (m)	N (f)
5400-6NF75	0.001 to 3 GHz	40 dBc, < 3 GHz		< 1.10, ≤ 2 GHz < 1.17, > 2 GHz	N (f)	N (f)
560-97A50	0.01 to 18 GHz	36 dB	50 Ω	< 1.10, ≤ 2 GHz	GPC-7	N (f)
560-97A50-1		40 dB		< 1.17, > 2 GHz		
560-97N50	0.01 to 18 GHz	35 dB	50 Ω	< 1.17, ≤ 8 GHz	N (m)	N (f)
560-97N50-1		38 dB		< 1.27, > 8 GHz		
560-97NF50		35 dB		< 1.17, ≤ 8 GHz	N (f)	
560-97NF50-1		38 dB		< 1.27, > 8 GHz		
560-98S50	0.01 to 26.5 GHz	37 dB, < 18 GHz 36 dB, < 26.5 GHz	50 Ω	< 1.14, ≤ 8 GHz < 1.22, ≤18 GHz < 1.27, ≤ 26 GHz	WSMA (m)	Ruggedized K (f)
560-98S50-1		40 dB, < 18 GHz 38 dB, < 26.5 GHz				
560-98SF50		37 dB, < 18 GHz 36 dB, < 26.5 GHz		< 1.14, ≤ 8 GHz < 1.22, ≤18 GHz < 1.27, ≤ 26 GHz	WSMA (f)	
560-98SF50-1		40 dB, < 18 GHz 38 dB, < 26.5 GHz				
560-98K50	0.01 to 40 GHz	35 dB, < 18 GHz 32 dB, < 32 GHz 30 dB, < 40 GHz	50 Ω	< 1.14, ≤ 8 GHz < 1.26, ≤18 GHz < 1.29, ≤ 26.5 GHz < 1.33, ≤ 32 GHz < 1.38, ≤ 40 GHz	K (m)	Ruggedized K (f)
560-98KF50		35 dB, < 18 GHz 32 dB, < 32 GHz 30 dB, < 40 GHz			K (f)	
560-98VA50	0.01 to 50 GHz	30 dB, < 40 GHz 30 dB, < 50 GHz	50 Ω	< 1.25, ≤ 40 GHz < 1.25, ≤ 50 GHz	V (m)	Ruggedized V (f)
560-98VFA50		30 dB, < 40 GHz 30 dB, < 50 GHz		< 1.25, ≤ 40 GHz < 1.25, ≤ 50 GHz	V (f)	
560-98C50	0.01 to 40 GHz	34 dB, ≤ 20 GHz 32 dB, ≤ 26.5 GHz 29 dB, ≤ 40 GHz	50 Ω	< 1.20, ≤ 20 GHz < 1.30, ≤ 40 GHz	SMA (m and f) 3.5 mm (m and f) K (m and f)	Ruggedized K (f)

DETECTORS

Model	Frequency Range	Impedance	Return Loss	Input Connector	Frequency Response
5400-71B50	0.001 to 1.5 GHz	50 Ω	20 dB	BNC(m)	± 0.2 dB, < 1.5 GHz
5400-71B75	0.001 to 1.5 GHz	75 Ω	20 dB	BNC(m)	± 0.2 dB, < 1.5 GHz
5400-71N50	0.001 to 3 GHz	50 Ω	26 dB	N(m)	± 0.2 dB, < 1 GHz ± 0.3 dB, < 3 GHz
5400-71N75	0.001 to 3 GHz	75 Ω	26 dB, ≤ 2 GHz 20 dB, ≤ 3 GHz	N(m)	± 0.2 dB, < 1 GHz ± 0.5 dB, < 3 GHz
560-7A50	0.01 to 18 GHz	50 Ω	16 dB, < 0.04 GHz 22 dB, < 8 GHz 17 dB, < 18 GHz	GPC-7	± 0.5 dB, < 3 GHz
560-7N50B	0.01 to 20 GHz	50 Ω	16 dB, < 0.04 GHz 22 dB, < 8 GHz 17 dB, < 18 GHz 14 dB, < 20 GHz	N(m)	± 0.5 dB, < 18 GHz ± 2.0 dB, < 20 GHz
560-7S50B	0.01 to 20 GHz	50 Ω	16 dB, < 0.04 GHz 22 dB, < 8 GHz 17 dB, < 18 GHz 14 dB, < 20 GHz	WSMA(m)	± 0.5 dB, < 18 GHz ± 2.0 dB, < 20 GHz
560-7S50-2	0.01 to 26.5 GHz	50 Ω	16 dB, < 0.04 GHz 22 dB, < 8 GHz 17 dB, < 18 GHz 14 dB, < 26.5 GHz	WSMA(m)	± 0.5 dB, < 18 GHz ± 2.0 dB, < 26.5 GHz
560-7K50	0.01 to 40 GHz	50 Ω	13 dB, < 0.04 GHz 22 dB, < 8 GHz 17 dB, < 18 GHz 16 dB, < 26.5 GHz 15 dB, < 32 GHz 13 dB, < 40 GHz	K(m)	± 0.5 dB, < 18 GHz ±1.25 dB, < 26.5 GHz ± 2.2 dB, < 32 GHz ± 2.5 dB, < 40 GHz
560-7VA50	0.01 to 50 GHz	50 Ω	19 dB, < 20 GHz 15 dB, < 40 GHz 10 dB, < 50 GHz	V(m)	± 0.5 dB, < 18 GHz ±1.25 dB, < 26.5 GHz ± 2.5 dB, < 40 GHz ± 3.0 dB, < 50 GHz

DETECTORS

The 5400 and 560 Series Detectors use zero-biased Schottky diodes. Measurement range is –55 dBm to +16 dBm using single cycle per sweep AC detection, Auto-zeroing with DC detection during the frequency sweep. Optional extender cables of over 3000 feet can be used with the 54100A Series. Contact local sales representative for special cables.

Maximum Input Power: +20 dBm

Standard Cable Length: 122 cm (4 ft.)

Dimensions: 7.6 x 2.9 x 2.2 cm (3 x 1-1/8 x 7/8 in.)

Weight: 170 g (6 oz.)

MEASUREMENT ACCESSORIES

RF CABLES

Model	Frequency Range (GHz)	Impedance (Ohms)	Length	Connectors
10B75-1	DC to 1.5 GHz	75	30.5 cm (1 ft.)	BNC (m)
10N50-1	DC to 1.5 GHz	50	30.5 cm (1 ft.)	N (m)
10N75-1	DC to 1.5 GHz	75	30.5 cm (1 ft.)	N (m)
N120-6	DC to 18 GHz	50	15.25 cm (6 in)	N (m)
N120-12	DC to 18 GHz	50	30.5 cm (1 ft.)	N (m)
NS120MF-6	DC to 18 GHz	50	15.25 cm (6 in)	N (m)-SMA (f)
K120MF-6	DC to 40 GHz	50	15.25 cm (6 in)	K (m)-K (f)
V120MF-6	DC to 67 GHz	50	15.25 cm (6 in)	V (m)-V (f)

These RF Cables are used to extend the source RF Output to the device-under-test input port.

POWER SPLITTERS

Power Model	Frequency Range	Connectors	
		Input	Outputs
N241A50	DC to 3.0 GHz	N (f)	N (f)
N241A75	DC to 3.0 GHz	N (f)	N (f)
1091-28	DC to 18 GHz	N (f)	N (f)
K241B	DC to 26.5 GHz	K (m)	K (f)
K241C	DC to 40 GHz	K (m)	K (f)
V241C	DC to 60 GHz	V (m)	V (f)

These power splitters are symmetrical, two-resistor tee designs that can be used in applications where signals must be accurately divided for ratio measurements. They provide excellent flatness and effective output SWR. K Connectors are compatible with 3.5 mm and SMA.

PRECISION ADAPTERS

Part Number	Frequency Range	Impedance	SWR	Connectors
34NN75B	DC to 3 GHz	75 Ω	1.1	N (m) to N (m)
34NFNF75B	DC to 3 GHz	75 Ω	1.1	N (f) to N (f)
34NN50A	DC to 18 GHz	50 Ω	1.1	N (m) to N (m)
34NFNF50	DC to 18 GHz	50 Ω	1.1	N (f) to N (f)
K220	DC to 40 GHz	50 Ω	1.22	K (m) to K (m)
K222	DC to 40 GHz	50 Ω	1.22	K (f) to K (f)
34VK50	DC to 46 GHz	50 Ω	1.3	V (m) to K (m)
34VKF50	DC to 46 GHz	50 Ω	1.3	V (m) to K (f)
34VFK50	DC to 46 GHz	50 Ω	1.3	V (f) to K (m)
34VFKF50	DC to 46 GHz	50 Ω	1.3	V (f) to K (f)
34VV50	DC to 60 GHz	50 Ω	1.4	V (m) to V (m)
34VFVF50	DC to 60 GHz	50 Ω	1.4	V (f) to V (f)

MATCHING PAD AND MINIMUM LOSS ADAPTER

Model	Frequency Range (MHz)	SWR	Insertion Loss (dB)	Connectors
12N50-75B	DC to 3000	1.25	7.5 max.	N (m) 50 Ω to N (f) 75 Ω
12N75B	DC to 3000	1.25	3.0 max.	N (m) 50 Ω to N (m) 75 Ω

The 12N50-75B pad matches 50 Ω to 75 Ω or 75 Ω to 50 Ω circuits. The 12N75B converts 50 Ω to 75 Ω with less than 3 dB loss.

ADAPTERS

Part Number	Frequency Range	Impedance	SWR	Connectors
1091-136	DC to 1.5 GHz	75 Ω	1.1	F (f) to F (f)
1091-137	DC to 1.5 GHz	75 Ω	1.1	N (f) to F (m)
1091-168	DC to 1.5 GHz	75 Ω	1.06	N (m) to F (m)
1091-169	DC to 1.5 GHz	75 Ω	1.06	N (m) to F (f)
1091-170	DC to 1.5 GHz	75 Ω	1.06	N (f) to F (f)
1091-171	DC to 1.3 GHz	50 Ω	1.03	N (m) BNC (m)
1091-172	DC to 1.3 GHz	50 Ω	1.03	N (m) BNC (f)
1091-173	DC to 1.3 GHz	50 Ω	1.03	N (f) BNC (m)
1091-174	DC to 1.3 GHz	50 Ω	1.03	N (f) BNC (f)
1091-175	DC to 1.3 GHz	75 Ω	1.03	N (m) BNC (m)
1091-176	DC to 1.3 GHz	75 Ω	1.03	N (m) BNC (f)
1091-177	DC to 1.3 GHz	75 Ω	1.03	N (f) BNC (m)
1091-178	DC to 1.3 GHz	75 Ω	1.03	N (f) BNC (f)
1091-26	DC to 18 GHz	50 Ω	1.3	N (m) SMA (m)
1091-27	DC to 18 GHz	50 Ω	1.3	N (m) SMA (f)
1091-80	DC to 18 GHz	50 Ω	1.3	N (f) SMA (m)
1091-81	DC to 18 GHz	50 Ω	1.3	N (f) SMA (f)

CONVERTIBLE SWR AUTOTESTER TEST PORT HEADS

DUT Connector	Test Head Model	Frequency Range	Open/Short Model
SMA (f)	25S50	DC to 26.5 GHz	22KF50
SMA (m)	25SF50	DC to 26.5 GHz	22K50
3.5 mm (f)	25L50	DC to 30 GHz	22KF50
3.5 mm (m)	25LF50	DC to 30 GHz	22K50
K (f)	25K50	DC to 40 GHz	22KF50
K (m)	25KF50	DC to 40 GHz	22K50
SMA (f), SMA (m)	25SK50	DC to 26.5 GHz	22KF50
K (f), K (m)	(Set of Four)	DC to 40 GHz	22K50

54100A SERIES NETWORK ANALYZER CONFIGURATION G

Model Number	Source Frequency	DUT's Input Connector	SWR Autotester	Detector	Power Splitter	Splitter Adapter	Ext. Leveling Detector	Source Cable
Connection Diagram Reference Letter			A	B	C	D	E	F
54107A	0.001 to 1.5 GHz	75 Ω F (m)	5400-67FF75	5400-71N75	N241A75	1091-175	73N75	10N75-1
		50 Ω BNC (f)	5400-6B50	5400-71B50	N241A50	34NN50A	73N50	10N50-1
		50 Ω BNC (m)	5400-6BF50	5400-71B50	N241A50	34NN50A	73N50	10N50-1
54109A	0.001 to 2.2 GHz	75 Ω BNC (f)	5400-6B75	5400-71B75	N241A75	34NN75B	73N75	10N75-1
		75 Ω BNC (m)	5400-6BF75	5400-71B75	N241A75	34NN75B	73N75	10N75-1
		50 Ω N (f)	5400-6N50	5400-71N50	N241A50	34NN50A	73N50	N120-6
		50 Ω N (m)	5400-6NF50	5400-71N50	N241A50	34NN50A	73N50	N120-6
54111A	0.001 to 3.0 GHz	75 Ω N (f)	5400-6N75	5400-71N75	N241A75	34NN75B	73N75	10N75B-1
		75 Ω N (m)	5400-6NF75	5400-71N75	N241A75	34NN75B	73N75	10N75B-1
54117A	0.01 to 8.6 GHz	50 Ω APC-7	560-97A50-1	560-7A50	1091-28	34NN50A	75N50B	N120-6
		50 Ω N (f)	560-97N50-1	560-7N50B	1091-28	34NN50A	75N50B	N120-6
		50 Ω N (m	560-97NF50-1	560-7N50B	1091-28	34NN50A	75N50B	N120-6
54147A	0.01 to 20 GHz	50 Ω SMA (f)	560-98C50[3]	560-7S50B	K241B	1091-27	75KB50	NS120MF-6
		50 Ω SMA (m)	560-98C50[3]	560-7S50B	K241B	1091-27	75KB50	NS120MF-6
54161A	0.01 to 32 GHz	50 Ω SMA (f)	560-98C50[3]	560-7S50-2	K241C	K220	75KC50	K120MF-6
		50 Ω SMA (m)	560-98C50[3]	560-7S50-2	K241C	K220	75KC50	K120MF-6
		50 Ω K (f)	560-98C50[3]	560-7K50	K241C	K220	75KC50	K120MF-6
		50 Ω K (m)	560-98C50[3]	560-7K50	K241C	K220	75KC50	K120MF-6
54169A	0.01 to 40 GHz	50 Ω V (f)	560-98VA50	560-7VA50	V241C[1]	34VV50	70VC50	K120MF-6
		50 Ω V (m)	560-98VFA50	560-7VA50	V241C[1]	34VV50	70VC50	K120MF-6
54177A	0.01 to 50 GHz	50 Ω K (f)	560-98C50[3]	560-7K50	K241C[1]	K220	75KC50	V120MF-6
		50 Ω K (m)	560-98C50[3]	560-7K50	K241C[1]	K220	75KC50	V120MF-6
		50 Ω V (f)	560-98VA50	560-7VA50	V241C	34VV50	70VC50	V120MF-6
		50 Ω V (m)	560-98VFA50	560-7VA50	V241C	34VV50	70VC50	V120MF-6

[1] V to K interconnections require male (source) to female power splitter adapters. [2] Also requires a source adapter. [3] See page 7 (bottom right) to select appropriate test port heads.

(A) SWR Autotesters

For optimum accuracy, the SWR Autotester test port must mate to the DUT's input connector. If you must use an adapter at the SWR Autotester test port, use a precision low SWR adapter to minimize degradation of directivity.

(B) Detectors

One detector is required for transmission or DTF measurements in non-ratio configurations. Ratio measurements (monitors source output power) require a second detector. BNC type detectors will not mate directly to the N-type power splitter output (for use as the Reference of a Ratio Measurement) or power divider output (for use in Distance-To-Fault Measurements). For these applications, use a 1091-172 adapter or an N(m) detector such as 5400-71N50, 5400-71N75, or 560-7N50B.

(C) Power Splitter

Two resistor power splitters are used for ratio measurements and external leveling.

(D) Splitter Adapter

Adapter mates the power splitter output to the SWR Autotester input for Ratio and/or externally leveled measurements.

(F) Source Cable

In manufacturing applications, using the source cable from the source output to the power splitter input (or, in Non-Ratio applications to the SWR Autotester input) helps minimize long term wear of the SWR Autotester's test port connector. The cable mates directly to power splitter's input. Connection directly to SWR Autotesters requires a male-male adapter for WSMA, K, and V type SWR Autotesters.

RT

rce ter	Power Divider	3 dB Attenuator	DUT Adapter	Precision Termination
	H	I	J	K
175	11N75B	1010-53	1091-169	1015-29
50A	11N50B	1010-31	1091-171	1015-35
50A	11N50B	1010-31	1091-172	1015-34
75B	11N75B	1010-53	1091-175	1015-37
75B	11N75B	1010-53	1091-176	1015-36
50A	11N50B	1010-31	34NN50A	26NF50
50A	11N50B	1010-31	n/a	26N50
75B	11N75B	1010-53	34NN75B	26NF75
75B	11N75B	1010-53	n/a	26N75
50A	1091-29	1010-31	34AN50	28A50-1
50A	1091-29	1010-31	34NN50A	26NF50
50A	1091-29	1010-31	n/a	26N50
N50	K240B	43KB-3	K220	28SF50
N50	K240B	43KB-3	n/a	28S50
20	K240C	43KB-3	K220	28SF50
20	K240C	43KB-3	n/a	28S50
20	K240C	43KC-3	K220	28KF50
20	K240C	43KC-3	n/a	28K50
RK50	V240C [2]	41V-3	34VV50	28VF50B
RK50	V240C [2]	41V-3	n/a	28V50B
RK50	K240C [2]	43KC-3	K220	28KF50
RK50	K240C [2]	43KC-3	n/a	28K50
RV50	V240C	41V-3	34VV50	28VF50B
RV50	V240C	41V-3	n/a	28V50B

(G) Source Adapter

This adapter mates the source output directly to the SWR Autotester input.

(H) Power Divider

Distance-To-Fault testing procedures recommend use of a three resistor power divider. Except for the 1091-29, the power divider connection to the source output requires a male-male adapter or an RF extension cable with male connectors.

(I) 3 dB Attenuators, (J) DUT Adapters, (K) Terminations

These components are used during coaxial Distance-To-Fault applications. Waveguide DTF applications may require a coaxial to waveguide adapter. Integrated DTF divider/detector modules are available in WR-22, WR-15, and WR-10.

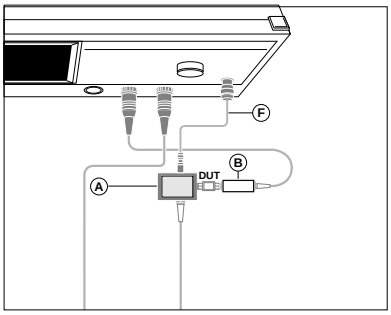

Non-Ratio Measurements: Eliminate one detector and the power splitter for measurements which do not need a source power reference detector.

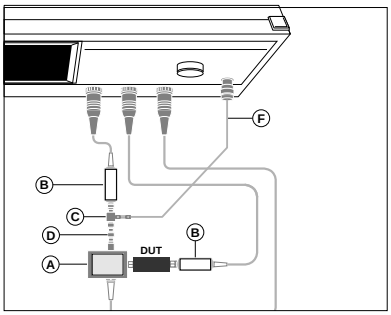

Ratio Measurements: Use ratio techniques whenever source amplitude is adjusted during the measurement process.

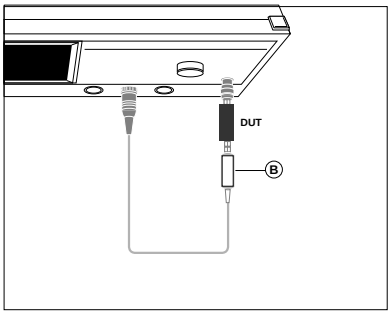

Gain (or Loss), Group Delay and Output Power: An RF detector measures transmission characteristics. Group Delay measurement quality improves when a RF splitter and a second RF detector are used in a ratio configuration.

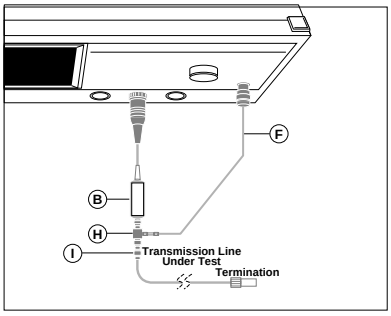

Distance-To-Fault: Faulty antenna systems and transmission lines are easily diagnosed with the 54100A Series optional Distance-To-Fault mode.

SYSTEM ACCESSORIES

LEVELING DETECTORS

Negative output polarity microwave detectors can be used to externally level 54100A power by sampling power at a remote test position. Connection is made to the 54100A rear panel (Option 6) via a BNC cable. For 70KC50 and 70VC50, an SMC (m) to BNC (m) cable is provided.

Max. Input: +20 dBm

Low Level Sensitivity at -30 dBm: 0.35 mV/µW

High Level Sensitivity at +13 dBm: 1V, minimum

Model	Frequency Range	Impedance	SWR (max.)	Flatness (dB)	Connectors
71B50	0.0001 to 3 GHz	50 Ω	1.2	± 0.5	Input: BNC (m) Output: BNC (f)
73N50	0.0001 to 4 GHz	50 Ω	1.2	± 0.5	Input: N (m) Output: BNC (f)
73N75	0.0001 to 2 GHz	75 Ω	1.2	± 0.5	Input: N (m) Output: BNC (f)
75N50B	0.01 to 18 GHz	50 Ω	1.39	± 0.6	Input: N (m) Output: BNC (f)
75KB50	0.01 to 26.5 GHz	50 Ω	1.5	± 1.0	Input: K (m) Output: BNC (f)
75VC50	0.01 to 40 GHz	50 Ω	1.5	± 1.5	Input: V (m) Output: SMC (f)
	40 to 50 GHz		2.1	± 3.0	

PRECISION TERMINATIONS

These precision, metrology–grade terminations are used in measurement systems where achieving the smallest possible reflections is critical.

Maximum Input Power: 0.5 W

Model	Frequency Range (GHz)	Test Port Connector	Input Impedance	SWR (F in GHz)
26N75	DC to 4	N (m)	75 Ω	1.004 + 0.0025F
26NF75		N (f)		
26N50	DC to 18	N (m)	50 Ω	1.004 + 0.0026F
26NF50		N (f)		
28A50	DC to 18	GPC-7	50 Ω	1.010 + 0.001F (1.020 Max.)
28A50-1				
28S50	DC to 26.5	WSMA (m)	50 Ω	1.036 to 18.5 GHz
28SF50		WSMA (f)		1.173 to 26.5 GHz
28S50-1	DC to 26.5	WSMA (m)	50 Ω	1.020 to 18.5 GHz
28SF50-1		WSMA (f)		1.135 to 26.5 GHz
28K50	DC to 40	K (m)	50 Ω	1.040 to 18.5 GHz
				1.070 to 26.5 GHz
28KF50		K (f)		1.135 to 40 GHz
28V50B	DC to 65	V (m)	50 Ω	1.070 to 40 GHz
				1.110 to 60 GHz
28VF50B		V (f)		1.230 to 65 GHz

RF LIMITERS

Return Loss: >11 dB, ≤ 20 GHz
>10 dB, ≤ 26 GHz

Insertion Loss: < 2.2 dB, ≤ 20 GHz, 0.0 dBm
< 3.2 dB, ≤ 26 GHz, 0.0 dBm

Turn-On Power: 10-14 dBm typ., ≤ 18 GHz
15-19 dBm typ., ≤ 26 GHz

RF limiters protect RF detectors against damage from:

1) DC Voltage — blocks up to 50 Vdc
2) AC Voltage — filters 50/60 Hz up to 100 Vac and impulse currents of >1.0 A.
3) RF Power — provides protection up to 3.0 W for frequencies range

Model	Frequency Range	Maximum Input Power	Impedance	Connectors
1N75C	0.01-3.0 GHz,	5 W	75 Ω	N (m) to N (f)
1N50C	0.01-18.0 GHz	5 W	50 Ω	N (m) to N (f)
1K50A	0.01-20.0 GHz	5 W	50 Ω	K (m) to K (f)
1K50B	0.01-26.0 GHz	3 W	50 Ω	K (m) to K (f)

DETECTOR EXTENDER CABLES

These cables can be installed between the SWR Autotester or Detectors and the 54100A. The 54100A is operational with cables up to 3000 feet.

Model	Cable Length
800-109	7.6 m (25 ft.)
800-110	15.2 m (50 ft.)
800-111	30.5 m (100 ft.)
800-112	61 m (200 ft.)
SC 5372	100 m (328 ft.)
Contact Factory	1000 ft.

GPIB CABLES

These cables connect the 54100A to a GPIB plotter or controller on the GPIB (IEEE–488 bus)

Model	Cable Length
2100-1	1 m (3.3 ft.)
2100-2	2 m (6.6 ft.)
2100-4	4 m (13.2 ft.)
2100-5	0.5 m (1.65 ft.)

DETECTOR ADAPTER CABLES

These adapter cables allow the 54100A to be used with waveguide or other detectors. The model 560-10BX can be used with Leveling Detectors. The 560-10BX-1 and -2 models are used with millimeter wave detectors.

Model	Cable Length	Connector Type
560-10BX	122 cm (4 ft.)	BNC (f)
560-10BX-1	122 cm (4 ft.)	SMA (m)
560-10BX-2	122 cm (4 ft.)	BNC (m)

MILLIMETER WAVE MEASUREMENT SYSTEMS

The Wiltron's Millimeter Wave Reflectometers are designed to operate with the 54147A 20 GHz Network Analyzer. The millimeter wave multiplier includes subharmonic filters and an isolator, to dramatically improve reflection accuracy.

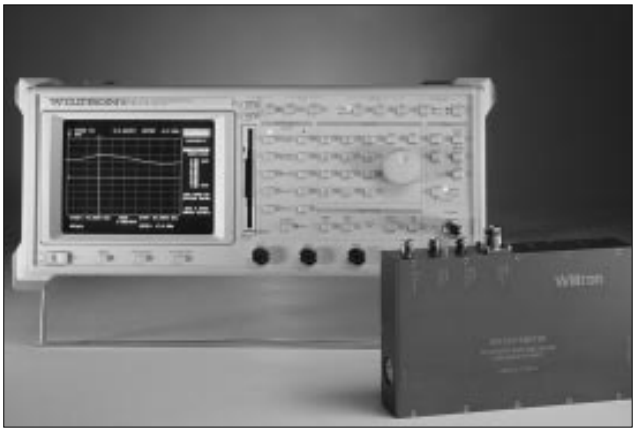

The 54000 Series millimeter wave reflectometers integrate the measurement components within the multiplier/amplifier housing.

Excellent multiplier source match provided by the internal isolators and the improved detector return loss allow accurate, simultaneous return loss and transmission measurements.

Millimeter Wave Reflectometer Configuration

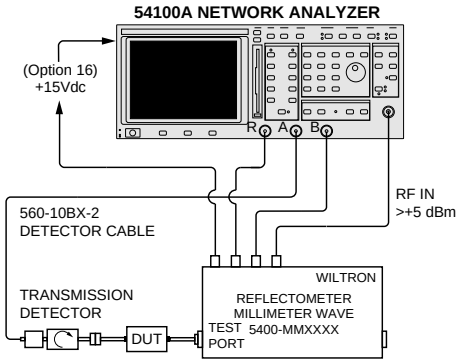

REFLECTION ACCURACY CHARACTERISTICS

Source Match: < 1.9 (< 1.7 Typical)

Directivity: 35 dB (> 40 dB Typical)

Dynamic Range: > 56 dB

Channel Accuracy:
Channel Accuracy is degraded by ± 0.4 dB from standard 54100A specifications

Output Power, Minimum: Leveled or Unleveled
V-band: 0.0 dBm min. (+ 4.0 dBm Typ.)
W-band: –5.0 dBm min. (+1.0 dBm Typ.)

Power Flatness, Unleveled: ± 3.0 dB Typ.

Required Input Frequency:
V-band: 12.75 to 18.75 GHz
W-band: 12.75 GHz to 18.33 GHz

Required Input Harmonics: < –60 dBc

Spurious Signals:
Harmonic: < –55 dBc (< –60 dBc Typical)
Nonharmonic: < –55 dBc (< –60 dBc Typical)

Frequency Accuracy: Source Dependent

Frequency Resolution: Source Dependent

MILLIMETER REFLECTOMETER ACCESSORIES

12" N (m) to N (m) RF input cable: PN: N120-12
Precision Attenuators: 1.08:1.0 SWR

Precision loads and attenuators allow low insertion loss devices such as couplers and wavequide sections to be accurately tested.
V band 3 dB: SM4784; 6 dB, SM4786
W band 3 dB: SM4785; 6 dB, SM4787

Precision Loads: 1.06: 1.0 SWR
V band, SM4782
W band, SM4783

DC Power Connections: SM4819 Twinax (m) – Twinax (m) cable
SM4816 Twinax to Dual Banana Plug
SM4818 Twinax to Dual EZ Hooks

PHYSICAL CHARACTERISTICS

Size: 9.5 x 4.5 x 1.5 inches

MILLIMETER WAVE DETECTORS

Maximum Input Power, Damage Level: +21 dBm

Special Waveguide Reflectometers Reflectometers have integrated multipliers/amplifiers. Input frequency is < 20 GHz					
			Test Port		**Input**
Model	**Frequency Range**	**Directivity**	**SWR**	**Flange**	**Connector**
54000-6WR15	50 to 75 GHz	35 dB, 40 dB typ.	<1.9 (<1.7 typ.)	WR-15	N (f)
54000-6WR10	75 to 110 GHz	35 dB, 40 dB typ	<1.9 (<1.7 typ.)	WR-10	N (f)
Millimeter Wave Detectors					
			Input Port		**Output**
Model	**Frequency Range**	**Dynamic Range**	**Return Loss**	**Flange**	**Connector**
54000-7WR15	50 to 75 GHz	> 56 dB typ.	17 dB	WR-15	BNC (f)
54000-7WR10	75 to 110 GHz	> 56 dB typ	17 dB	WR-10	BNC (f)

Return Loss Measurement Accuracy

Uncertainties resulting from SWR Autotester and source frequency response and from system open and short characteristics are subtracted automatically from test data. Overall accuracy is then:

Channel Accuracy
+ Autotester Accuracy
+ Distortion From Source Harmonics
Return Loss Measurement Accuracy

Autotester accuracy is composed of error due to directivity and error due to test port match. Unless the DUT has very poor return loss (high SWR), directivity will be largest source of error. When an adapter is used at the test port, use Effective Directivity to determine possible errors.

NOTE: Return loss errors due to source harmonics will be significant when the harmonic level is within 10 dB of the DUT's measured return loss.

RETURN LOSS ACCURACY DUE TO DIRECTIVITY

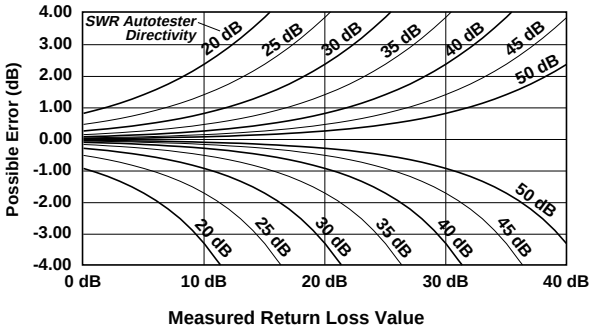

RETURN LOSS ACCURACY DUE TO EFFECTIVE DIRECTIVITY

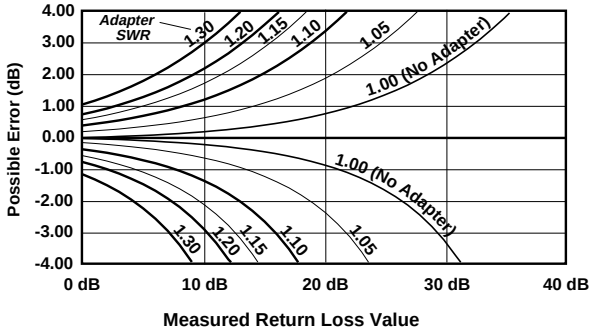

Effective Directivity is the reduction to Directivity due to the adapter's SWR performance. The chart above assumes a 40 dB directivity SWR Autotester.

CHANNEL ACCURACY (25°C)

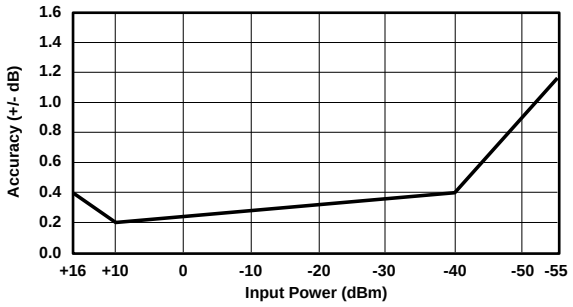

RETURN LOSS ACCURACY DUE TO SOURCE HARMONICS

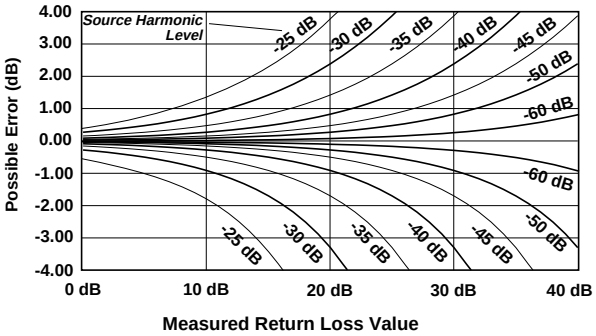

This chart assumes full reflections of a single source harmonic at the DUT input. Multiple harmonics can cause additional measurement uncertainty.

Source harmonics are a significant source of return loss measurement uncertainty when testing banded devices such as filters, receivers, transmitters, power amplifiers, and antennas. With the source output frequency in the DUT passband, the source harmonics are in the reject band. Thus, the total signal power of the harmonic is reflected into the SWR Autotester's internal broadband detector.

RELATIVE GROUP DELAY

Optional relative group delay software identifies signal distortion caused by bandpass devices such as filters, receivers, power amplifiers, and up/down converters. Group delay is a key cause of high Bit Error Rate (BER). Group delay is important for 1) CDMA and spread spectrum communications 2) phase radars 3) high capacity satellite and terrestrial microwave links 4) PAL and HDTV television components and other RF systems sensitive to phase distortion.

The 54100A saves time and expense by eliminating several pieces of expensive test equipment – combining the capabilities into a single, low cost test station. Manufacturing processes save re-test/re-tuning time by utilizing a single 54100A instead of two separate tuning stations – one for transmission and return loss and the other for relative phase group delay. The 54100A's other convenient features for Distance-To-Fault analysis, Convertible SWR Autotesters, rugged construction, low cost and wide frequency range make it an ideal field service analyzer.

In many manufacturing applications, the 54100A can replace expensive vector network analyzers. Furthermore, the 54100A can accurately test frequency conversion devices without the wideband reference converters required with vector network analyzers or microwave system analyzers.

Calibration requires only an RF path normalization with a standard RF detector. Relative group delay specifications assume measurement of bandpass devices. Frequency sweep must include at minimum 20 dBr of transmission rolloff from mid-band response. For best results, set the frequency sweep to cover more than 20 dBr rolloff is suggested.

Relative Group Delay Accuracy: Typically < 1ns, < 5.0% of peak-to-valley range with noise averaged. Assumes the band limiting device within the DUT meets minimum phase shift design. Devices such as SAW filters, microwave phase equalizers, and branch line couplers will have additional uncertainty.

Calibration: A transmission path normalization is required.

PRECISION RETURN LOSS MODE

Terminations, adapters, and connectors have return loss values that are difficult of measure directly with a standard SWR Autotester. Without proper care, test bench components can be easily damaged without showing significant physical changes.

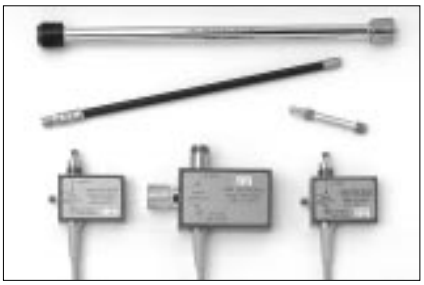

Offset SWR Autotesters and Precision Airlines measure high return loss values from 20 dB to 60 dB.

Precision Return Loss Mode automatically verifies the specified performance of these common test components using an Offset SWR Autotester, Airline, Open/Short, and a Termination.

Component Connections for Precision Return Loss Mode

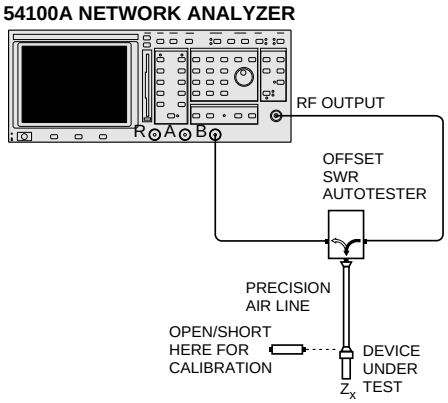

SELECTION GUIDE

DUT Connector	Offset SWR Autotester	Airline	Open Short	Precision Terminations[1]
GPC-7	560-97A50-20	18A50	22A50	28A50 28A50-1
N male N female	560-97A50-20 560-97A50-20	18NF50 18N50	22N50 22NF50	26N50 26NF50
SMA male	560-98KF50-15	19SF50	22S50	28S50 28S50-1
SMA female	560-98KF50-15	19S50	22SF50	28SF50 28SF50-1
3.5mm male	560-98KF50-15	19LF50 (SC4127)	22K50	28K50
3.5mm female	560-98KF50-15	19L50 (SC3588)	22KF50	28KF50
K male K female	560-98KF50-15 560-98KF50-15	19KF50 19K50	22K50 22KF50	28K50 28KF50

[1]Terminations are needed for adapter verification tests and other two port device testing.

PRECISION AIRLINE SPECIFICATIONS

Model	Freq. Range (GHz)	Test Port Connector	Beaded Port Connector	SWR	Dia. (mm)	Length (cm)
18A50	0.5 to 18	GPC-7	GPC-7	1.003 (Test Port) 1.020 (Beaded End)	7	30
18N50	0.5 to 18	N (m)	GPC-7	1.006	7	30
18NF50		N (f)				
19S50	0.8 to 26.5	WSMA (m)	WSMA male	1.006 to 18 GHz 1.010 to 26.5 GHz	3.5	25
19SF50		WSMA (f)				
19K50	0.8 to 40	K (m)	1.020	1.020	2.9	15
19KF50		K (f)				

Waveguide SWR Autotesters					
Model	Frequency Range	Directivity	Test Port		Input Connector
			Return Loss	Flange	
560-WR229	3.6 to 4.2 GHz, WR229	40 dB	22 dB	UG-1350/U	N (f)
560-WR137	5.9 to 6.5 GHz, WR137	40 dB	22 dB	UG-1356/U	N (f)
SC5302	6.5 to 7.1 GHz, WR137	38 dB	22 dB	UG-1356/U	N (f)
SC5121	7.1 to 7.9 GHz, WR137	38 dB	22 dB	UG-1356/U	N (f)
SC5125	7.3 to 7.7 GHz, WR112	40 dB	22 dB	UG-1358/U	N (f)
560-WR90	10.7 to 11.7 GHz, WR90	40 dB	19 dB	UG-1360/U	N (f)
SC5122	12.7 to 13.3 GHz, WR75	40 dB	19 dB	UDR120	N (f)
SC5123	14.0 to 14.5 GHz, WR62	40 dB	19 dB	UG-419/U	N (f)
SC5137	14.5 to 15.5 GHz, WR62	40 dB	19 dB	UG-419/U	N (f)
560-WR42	18 to 19 GHz, WR42	40 dB	19 dB	UG-595/U	N (f)
SC5124	21.2 to 23.6 GHz, WR42	38 dB	19 dB	UG-595/U	Ruggedized K (f)
560-WRXX	Customer Specified	Contact AW	Contact AW	Customer Specified	N (f)

WAVEGUIDE SWR AUTOTESTERS

New Waveguide SWR Autotesters are tuned for unequaled high directivity performance with a coaxial to waveguide flange installed on the test port. The result is a small package that is a) more rugged, b) easier-to-use, c) more accurate, and d) more reliable than precision waveguide couplers.

WAVEGUIDE SWR ADAPTERS

A wide variety of standard waveguide sizes are designed for field testing of installed waveguide within:

- Microwave Communications Towers
- Cellular Base Stations
- Aircraft Radar Transmission Lines
- Ship-board Radar Transmission Lines

When ordering, please alert your Anritsu Wiltron sales representative to request special flange types.

SPECIAL WAVEGUIDE ADAPTERS

Wiltron markets some of the worlds rarest – and most useful – coaxial to waveguide transitions. For example, the 26 GHz to 40 GHz waveguide to 40 GHz K-type coaxial is the only precision instrumentation grade transition available for Ka band.

Model	Frequency Range (GHz)	Connectors	W/G Flange UG-(_)U	SWR
35WR42K 35WR42KF	18 to 26.5	WRD42 to K Male WRD42 to K Female	595	1.25
35WR180K 35WR180KF	18 to 40	WRD180 to K Male WRD180 to K Female	N/A	1.25
35WR28K 35WR28KF	26.5 to 40	WR28 to K Male WR28 to K Female	599	1.25
35WR22K 35WR22KF	33 to 40	WR22 to K Male WR22 to K Female	383	1.30
35WR22V 35WR22VF	33 to 50	WR22 to V Male WR22 to V Female	383	1.30
35WR19K 35WR19KF	40 to 50 Usable to 54	WR19 to K Male WR19 to K Female	383	1.30
35WR19V 35WR19VF	40 to 60	WR19 to V Male WR19 to V Female	383	1.30
35WR15V 35WR15VF	50 to 67	WR15 to V Male WR15 to V Female	385	1.30

Wiltron manufactures a wide variety of high frequency waveguide to coaxial adapters.

Customer requests for new standards supporting millimeter wave applications in wireless LANs, vehicle collision avoidance, and wafer probing have lead to the development of coaxial to waveguide transitions to 67 GHz (V connectors) and 110 GHz (W connectors).

DISTANCE-TO-FAULT

The optional Distance-To-Fault software displays impedance discontinuities versus distance based on a swept frequency measurement of transmission line mismatch. The software is available by ordering Option 7 with 54100A Series Network Analyzers.

Measurements: Distance-To-Fault (meters or feet), Return loss or SWR of fault.

Frequency Sampling: 256, 512, or 1024 frequency points.

Window Functions: Hamming, 2-term, –42 dB sidelobes;

Blackman-Harris, 3-term, –67 dB sidelobes.

Anti-aliasing: Filtering of post detected data rejects indications of false faults caused by signal re-reflections during high reflection fault conditions or out of band sweep on antenna systems.

Distance Accuracy: < 0.01% of range or 2 mm dependent upon knowledge of the propagation velocity for the device under test and the frequency sweep range.

Dynamic Range: > 80 dB, depending upon calibration component return loss and operating frequency range.

Return Loss Amplitude Accuracy: Effective Directivity is dependent upon the return loss of the precision termination used during calibration.

Distance Range: 1 to 5000 meters depending on measurement frequency range and hardware configuration.

Distance Resolution (of one fault):
0.4% of total distance (256 frequency measurement points),
0.2% of total distance (512 frequency measurement points),
0.1% of total distance (1024 frequency measurement points).

Transmission Lines Supported:

- Coaxial Cable
- Waveguide
- Waveguide with Coaxial Cable Input

Transmission line loss and velocity factor are corrected by the software. Waveguide dispersion is corrected based on the cutoff frequency, f_C. For waveguide with coaxial cable input, a special operating mode is utilized to automatically compensate for the length of non-dispersive coaxial cable in front of the waveguide transmission line.

Distance-To-Fault Measurement Accessories:

Wiltron Distance-To-Fault test systems utilize standard diode detectors and measurement accessories.

POWER DIVIDERS

Power Divider Model	Frequency Range	Connectors	
		Input	Output
11N50B	DC to 3 GHz	N (f)	N (f)
11N75B	DC to 3 GHz	N (f)	N (f)
1091-29	DC to 18 GHz	N (m)	N (f)
K240B	DC to 26.5 GHz	K (f)	K (f)
K240C	DC to 40 GHz	K (f)	K (f)
V240C	DC to 60 GHz	V (f)	V (f)

These signal dividers are symmetrical, three-resistor tee designs that are used with the Distance-To-Fault option and other applications requiring two inputs to be combined into a single output.

Maximum Input Power: +30 dBm

3 dB ATTENUATORS

3 dB Attenuator Model	Frequency Range	Connectors	
		Input	Output
1010-31	0.01 to 18 GHz	N (m)	N (f)
43KB-3	0.01 to 26.5 GHz	K (m)	K (f)
43KC-3	0.01 to 40 GHz	K (m)	K (f)
41V-3	0.01 to 60 GHz	V (m)	V (f)

RECOMMENDED TERMINATIONS

Model	Impedance	Frequency Range	Connector
1015-29	75 Ω	DC to 1.5 GHz	F (f)
1015-34	50 Ω	DC to 2 GHz	BNC (m)
1015-35	50 Ω	DC to 2 GHz	BNC (f)
1015-36	75 Ω	DC to 1 GHz	BNC (m)
1015-37	75 Ω	DC to 1 GHz	BNC (f)
26N75	75 Ω	DC to 4 GHz	N (m)
26N50	50 Ω	DC to 18 GHz	N (m)
28S50	50 Ω	DC to 26.5 GHz	WSMA (m)
28S50-1	50 Ω	DC to 26.5 GHz	WSMA (m)
28K50	50 Ω	DC to 40 GHz	K (m)
28V50	50 Ω	DC to 65 GHz	V (m)

Terminations are required for calibration and are occasionally used for terminating the output of the coaxial cable under test. Contact your local sales representative for additional precision termination models.

Non-Ratio Operation, Waveguide

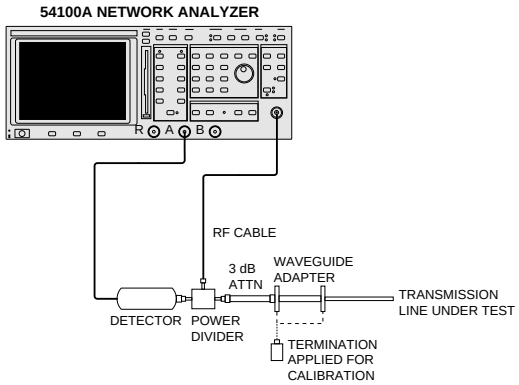

Non-Ratio Operation, Coaxial

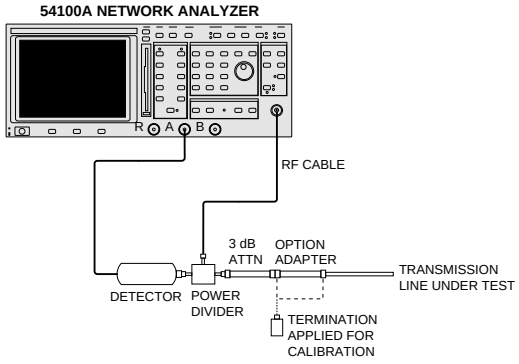

Ordering Information

54100A SERIES MODELS

54107A Network Analyzer, 1 MHz to 1.5 GHz
54109A Network Analyzer, 1 MHz to 2.2 GHz
54111A Network Analyzer, 1 MHz to 3 GHz
54117A Network Analyzer, 10 MHz to 8.6 GHz
54147A Network Analyzer, 10 MHz to 20 GHz
54161A Network Analyzer, 10 MHz to 32 GHz
54169A Network Analyzer, 10 MHz to 40 GHz
54177A Network Analyzer, 10 MHz to 50 GHz

OPTIONS

Option 1	**Rack Mounting with Slides**
Option 2	**70 dB RF Step Attenuator**
Option 2A	**70 dB 20 GHz Step Attenuator**
Option 2B	**70 dB 26.5 GHz Step Attenuator**
Option 2C	**70 dB 40 GHz Step Attenuator**
Option 2D	**70 dB 50 GHz Step Attenuator**
Option 4	**75 ohm Source Output** (Available to 3.0 GHz)
Option 5	**Add Reference Channel**
Option 6	**Add External Leveling**
Option 7	**Internal Distance-To-Fault Software**
Option 8	**Internal Relative Group Delay Software**
Option 12	**Add Front Panel Cover**
Option 13	**Add Front Mounted Handles**
Option 16	**+15 V DC Supply for Millimeter Wave Source Modules.** (Available with ≤20 GHz Models Only)
Option 25	**Maintenance Manual**
Option 26	**Extra Operation and GPIB Programming Manual**
Option 33	**Canon BJ30 Bubble Jet Printer**

DETECTORS

5400-71N50L	**5 MHz to 1 GHz**	N (m)
5400-71N50	**1 MHz to 3 GHz**	N (m)
5400-71N75	**1 MHz to 3 GHz**	N (m)
560-7A50	**10 MHz to 18 GHz**	GPC-7
560-7N50B	**10 MHz to 20 GHz**	N (m)
560-7S50B	**10 MHz to 20 GHz**	WSMA (m)
560-7S50-2	**10 MHz to 26.5 GHz**	WSMA (m)
560-7K50	**10 MHz to 40 GHz**	K (m)
560-7VA50	**10 MHz to 50 GHz**	V (m)

SWR AUTOTESTERS

5400-6N50	**1 MHz to 3 GHz**	N (m)
5400-6NF50	**1 MHz to 3 GHz**	N (f)
5400-6N75	**1 MHz to 3 GHz**	N (m)
5400-6NF75	**1 MHz to 3 GHz**	N (f)
560-97A50	**10 MHz to 18 GHz**	GPC-7
560-97A50-1	**10 MHz to 18 GHz**	GPC-7
560-97N50	**10 MHz to 18 GHz**	N (m)
560-97N50-1	**10 MHz to 18 GHz**	N (m)
560-97NF50	**10 MHz to 18 GHz**	N (f)
560-97NF50-1	**10 MHz to 18 GHz**	N (f)
560-98S50	**10 MHz to 26.5 GHz**	WSMA (m)
560-98S50-1	**10 MHz to 26.5 GHz**	WSMA (m)
560-98SF50	**10 MHz to 26.5 GHz**	WSMA (f)
560-98SF50-1	**10 MHz to 26.5 GHz**	WSMA (f)
560-98K50	**10 MHz to 40 GHz**	K (m)
560-98KF50	**10 MHz to 40 GHz**	K (f)
560-98C50	**10 MHz to 40 GHz**	SMA (m,f), K (m,f)
560-98VA50	**10 MHz to 50 GHz**	V (m)
560-98VFA50	**10 MHz to 50 GHz**	V (f)

WAVEGUIDE SWR AUTOTESTERS

560-WR229	**3.6 to 4.2 GHz**	N (f)
560-WR137	**5.9 to 6.5 GHz**	N (f)
560-WR90	**10.7 to 11.7 GHz**	N (f)
560-WR42	**18 to 19 GHz**	N (f)
560-WRXX	**Customer Specified**	

UPGRADES

54107A-to-54109A	ND41000
54107A-to-54111A	ND41001
54109A-to-54111A	ND41002
54147A-to-54161A	ND41009
54147A-to-54169A	ND41010
54147A-to-54177A	ND41011
54169A-to-54177A	ND41012

U.S. Sales Centers:
North West (408) 776-8305
North East (201) 227-8999
Central (214) 644-1777
South West (310) 715-8262
South East (301) 590-0300

Anritsu Wiltron
Microwave Measurements Division • 490 Jarvis Drive • Morgan Hill, CA 95037-2809
http://www.anritsuwiltron.com • FAX (408) 778-0239

International Sales Centers:
Europe Intl. 44 (1582) 418853
Japan (03) 3446-1111
Canada (613) 828-4090
Asia-Pacific Intl. 81 (3) 3440-2770

Printed in USA
August 1996; Rev: C
Data subject to change without notice

11410-00131
DS54100A-2 /GIP-G