Mainframe Specifications and Characteristics

Agilent 16700 Series Technical Information

System Software

All features and functionality described in this document are available with system software version A.02.70.00 or higher.

Mass Storage

Hard Disk Drive	18 GB formatted disk drive
Floppy Disk Drive	
• Capacity	1.44 MB formatted
• Media	3.5 inch floppy
• Formats	MS-DOS (Read, write, format), LIF (Read only)

Internal System RAM

Standard	128 MB
Option 003 (Must be ordered at time of frame purchase)	256 MB total

Supported Monitor Resolutions

Standard	640 x 480 through 1280 x 1024 (The 16702B has a built-in 800 x 600, 12.1" (26.2mm) diagonal monitor.)
Option 003 (Must be ordered at time of frame purchase)	Adds support for up to 1600 x 1200

LAN, IEEE 802.3

Physical Connectors	16700B Series: 10BaseT/100BaseT-X (ethertwist): RJ-45 16700A Series: 10BaseT (ethertwist): RJ-45; 10Base2: BNC
Protocols Supported	TCP/IP NFS CIFS (Windows® 95/98/NT/2000/XP) [1] FTP NTP PCNFS
X-Window Support	X Window system version 11, release 6, as a client and server

[1] User and share level control supported for Windows NT® 4.0. Share level control only supported for Windows 95/98.

Mainframe Specifications and Characteristics

Agilent 16700 Series Technical Information (continued)

Web Server	
Supported from Instrument Web Page	Measurement status check,remote display, installation of PC application software, link to Agilent's Test and Measurement site
PC Requirements	Pentium® (family) PC (200 MHz, 32 MB RAM) running Windows 95, Windows 98, Windows NT 4.0 with service pack 3 or higher, Windows 2000 or Windows XP
Supported Web Browsers (on Your PC or Workstation)	Internet Explorer 4.0 or higher, Netscape 4.0 or higher

IntuiLink Support	
Installation of PC Application Software	Directly from instrument web page
MS Excel	Excel 97 Version 7.0 or later. Excel limits maximum trace depth to 64K per sheet.

Available Data Formats	
Fast Binary (Compressed Binary Format)	High performance transfer rate. Includes source code to parse data. Available via File Out.
Uncompressed Binary	Includes utility routines. Available via RPI.
ASCII	Provides same format as listing display, including inverse-assembled data. Available via RPI and File Out.
Pattern Generator Binary	Used to load large amount of stimulus (> 1M) into the 16720A pattern generator

Intermodule Bus (IMB)	
Time Correlation Resolution	2 ns

Port In/Out	
Connectors	BNC

Mainframe Specifications and Characteristics

Agilent 16700 Series Technical Information (continued)

Port In	
Levels	TTL, ECL, or user defined
Input Resistance	4 KΩ
Input Voltage	–6V at –1.5 mA to +6V at 1.6 mA

Port Out	
Levels	3V TTL compatible into 50 Ω
Functions	Latched (latch operation is module dependent) Pulsed, width from 66 ns to 143 ns

Target Control Port	
Number of signals	8
Levels	3V TTL compatible
Connector	2 rows of 5 pins, 0.1-inch centers

Operating Environment	
Temperature	
• Instrument	0°C to 50°C (32°F to 122°F)
• Disk Media	10°C to 40°C (50°F to 104°F)
• Probes/Cables	O°C to 65°C (32°F to 149°F)
Altitude	To 3000m (10,000 ft)
Humidity	8 to 80% relative humidity at 40°C (104°F)

Printing	
Printer Interface	Parallel interface for Centronics compatible printers
Printers Supported	PostScript printers and printers which support the HP Printer Control Language (PCL)
Graphics	Graphics can be printed directly to the printer or to a file. Graphic files can be created in black-and-white or color TIFF format, PostScript, PCX, or XWD formats

Mainframe Specifications and Characteristics

Remote Programming Interface (RPI)

RPI Overview

Typical Applications	Manufacturing Test Data Acquisition for Offline Analysis System Verification and Characterization Pass/Fail Analysis Stimulus Response Tests
Remote Programming Steps	1. Set up the logic analyzer and save the test configuration. 2. Create a program that remotely: Loads a test configuration Starts the acquisition process Checks measurement status (verifies completion) Acts on the results of the data acquisition • Saves configuration and captured data • Exports data • Executes a compare • Modifies the trigger setup or trigger value for the next acquisition • Accesses the oscilloscope's automatic measurements
Physical Connection	Remote programming is done via the LAN connection

Requirements

16700B Series Analysis Systems	RPI is standard with system software version A.02.00.00 or higher
PC	Programming is done via Microsoft® ActiveX/COM automation Pentium (family) PC with one of the following: • Windows 95 • Windows 98 • Windows NT 4.0 with Service Pack 3 or higher • Windows 2000 • Windows XP Visual Basic or Visual C++ (Version 5.0 or higher)
UNIX®	Programming is done via TCP/IP socket based ASCII commands

Mainframe Specifications and Characteristics

Remote Programming Interface (RPI) (continued)

Command Set Summary - Commands available on both UNIX and PC

System	System Configuration Query Load/Save Configuration and Data Start/Stop Measurement Current Run Status Start/Stop/Query a Session
Logic Analysis Modules	Load/Save Configuration and Data Trigger Setup Acquisition Data and Parameters Set/Query Acquisition Mode Set/Query Acquisition Depth Set/Query Pod Assignment Add/Delete/Load/Query Labels Set/Query Trigger Position Modify Occurrence Count
Oscilloscope Modules	Load/Save Configuration and Data Acquisition Data / Parameters Query Automatic Measurements Trigger Setup
Pattern Generator	Load/Save Configuration and Data Load ASCII file (vectors) or PGB (pattern generator binary) files (16720A only) Modify Vector Set/Query Clock Frequency Set/Query Clock Out Delay Insert New Vector at Specific Position Delete Specific Vector
Emulation Module	Reset Processor Run Processor Break Processor Single Step
Listing Tool	Status Acquisition Data and Parameters Transfer Data (includes inverse assembled information)
Compare Tool	Execute Compare Set Compare Mask Query Compare Result Specify Range to Compare Abort Compare After Specified Number of Differences Return Labels and Values Where Differences Occur
File Out Tool	Transfer Data to File Select Range to Expert

Additional Information

Instrument Online Help	Programming Information in instrument online help
Web Sites	Full remote programming documentation (pdf) available on the hard drive. Sample programs are provided

Mainframe Specifications and Characteristics

IntuiLink

Programming Examples Provided with IntuiLink

Visual Basic	Examples have been included for use with Visual Basic 5.0 or higher. These examples perform simple functions such as: system checks, oscilloscope measurements, pass/fail tests using stored configuration and pattern generator stimulus files, and stimulus/response tests. They also can capture and retrieve data for off-line analysis.
Visual C++	Examples have been included for use with Visual C++ 5.0 or higher to perform simple functions such as: system check, capturing and retrieving data for off-line analysis.
LabVIEW	An instrument library has been included for use with LabVIEW 5.1 or higher. This library contains five LabVIEW samples that provide a starting point for creating your own LabVIEW programs. • Load/Run/Save - loads a configuration, runs a measurement, then saves results to a file • Analyzer Listing - runs the logic analyzer and displays data in a table • Pass/Fail - runs the logic analyzer and compares the measurement data against a standard • Scope Waveform - runs the oscilloscope module and displays waveform data • Scope Measurements - runs the oscilloscope module and displays a number of oscilloscope measurements
HP VEE	An instrument library has been included for use with HP VEE 5.0 or higher that provides a starting point for creating your own application. • Load/Run/Save - loads a configuration, runs a measurement, then saves results to a file

Mainframe Specifications and Characteristics

Agilent 16700B Series Physical Characteristics

Power

16700B	115/230 V, 48 to 66 Hz, 610 W max
16701B	115/230 V, 48 to 66 Hz, 545 W max
16702B	115/230 V, 48 to 66 Hz, 610 W max

Weight*

	Max Net	Max Shipping
16700B	12.7 kg (27.0 lb)	34.2 kg (75.4 lbs)
16701B	10.4 kg (23.0 lb)	32.0 kg (70.6 lbs)
16702B	15.2 kg (32.4 lb)	36.7 kg (80.8 lbs)

* Weight of modules ordered with mainframes will add 0.9 kg (2.0 lb) per module.

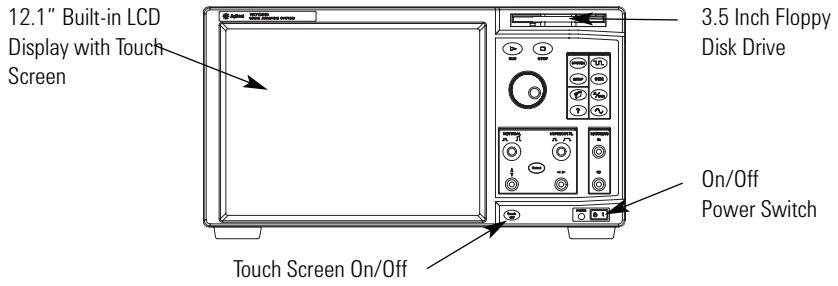

Figure 6.1. Agilent 16702B front panel.

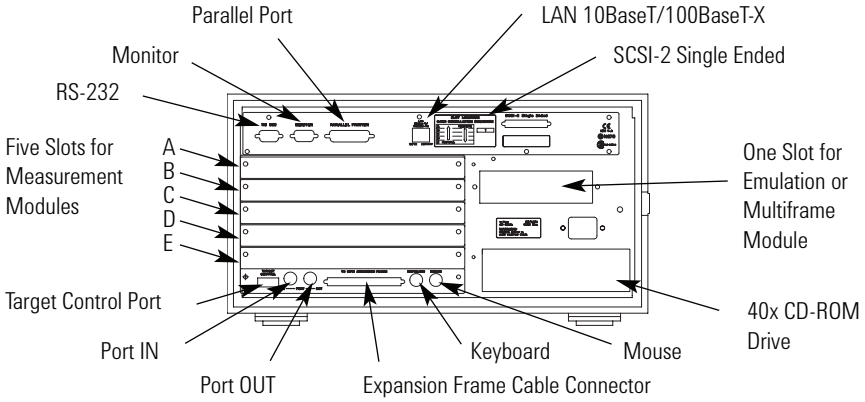

Figure 6.2. Back panel for Agilent models 16700B and 16702B.

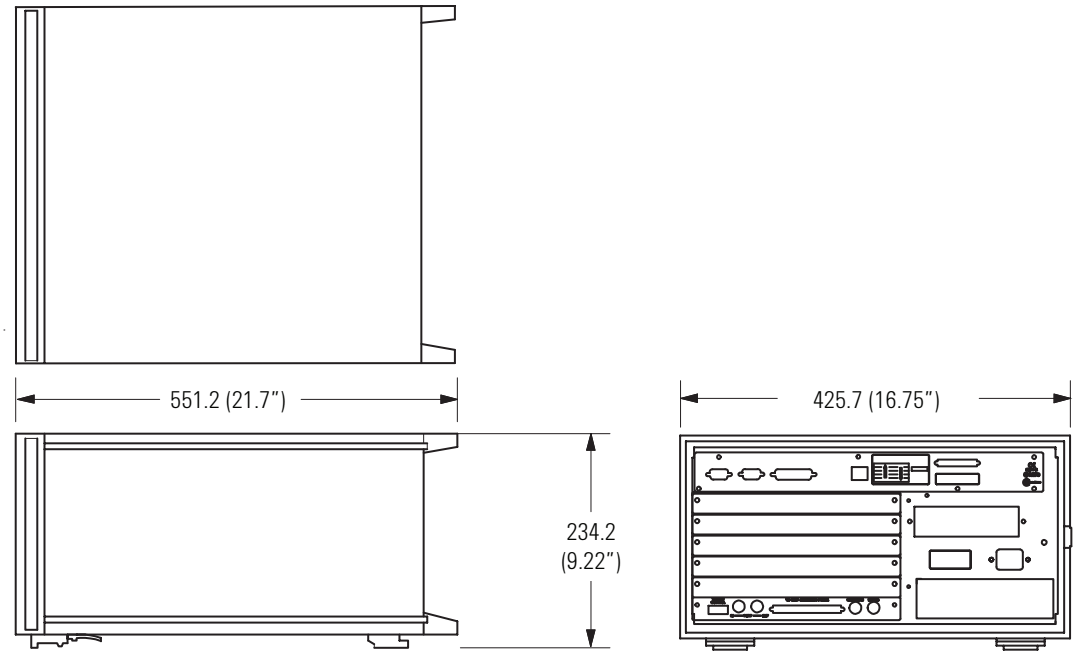

Dimensions: mm (inches)

Figure 6.3. Exterior dimensions for the 16700B Series mainframe.