16454A Magnetic Material Test Fixture

Terminal Connector: 7 mm
Dimensions (approx.):
(Large Test Fixture) 30(D) x 35(H) [mm]
(Small Test Fixture) 24(D) x 30(H) [mm]
Weight (approx.):
(Large Test Fixture) 140 g
(Small Test Fixture) 120 g
Measurement Accuracy (typical.):

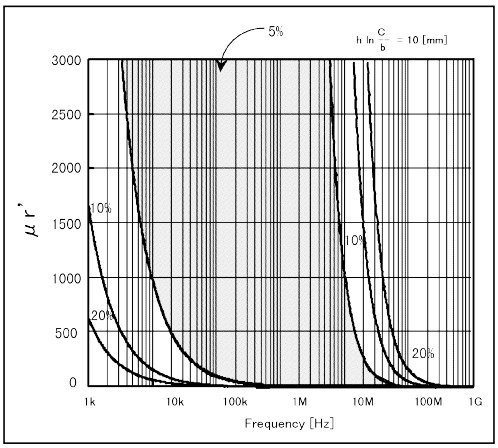

Typical Permeability (μr') Measurement Accuracy (@ h* ln c/b = 10)

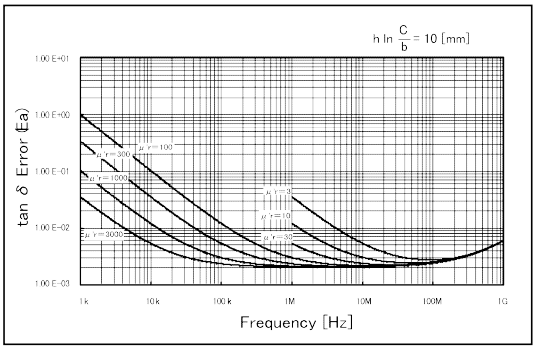

Typical Loss Tangent (tan δ) Measurement Accuracy (@ h* ln c/b = 10)

Description: The 16454A is designed for accurate permeability measurements of toroidal-shaped magnetic materials. Since the construction of this fixture creates one turn around the toroid (with no magnetic flux leakage), the need of winding a wire around the toroid is unnecessary. The following figure shows the one-turn mechanism and how complex permeability is calculated from it.

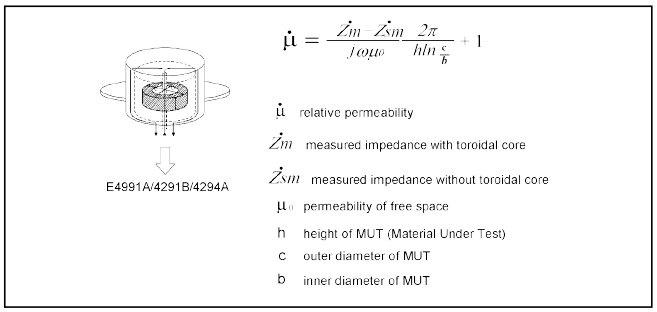

Permeability measurement method of 16454A

Complex permeability is calculated from the inductance with and without the toroid. When E4991A with option E4991A-002 is used as the measurement instrument, direct readouts of complex permeability are possible. In addition, it is furnished with a small and a large fixture to adapt to a wide range of sizes.
Applicable Instruments: E4991A with Opt.E4991A-002, (4291A/B with Opt.4291A/B-002)*
* denotes the instrument is obsolete.
Frequency: 1 kHz to 1 GHz,
DC Bias: -500 mA to +500 mA (max)
Operating Temperature: -55°C to 200°C
When Option E4991A-007 temperature characteristic test kit is used with E4991A, the operating temperature range is between -55°C and +150°C. The temperature characteristic test kit is unavailable for the 4294A.
Material Size: See figure below.

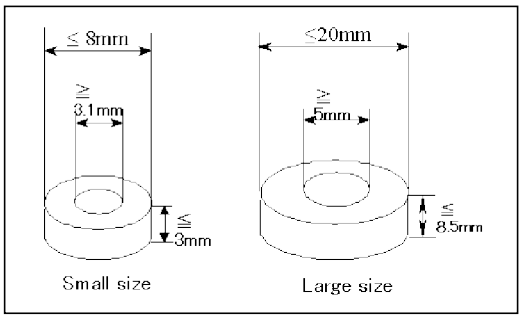

Material size