x is the input signal measurement accuracy and y is instrument error with no input signal. For example: assume a 10V dc input (10000 digits) on the 20V dc range. The stated accuracy is ±(0.005% of input +2 digits). Calculation yields an overall accuracy of ±(0.005% of 10000 digits +2 digits) = ±(5 + 2) = ± (7 digits). Therefore, for an absolute 10V dc input the 8810A will read between 9.9993 and 10.0007.

Table 1-2. 8810A Specifications

DC VOLTAGE	
Ranges	±200 mV, ±2V, ±20V, ±200V, ±1200V
Accuracy	
24 Hour, 23°C ±1°C	
200 mV range	±(0.008% of input + 5 digits)
2V–200V range	±(0.005% of input + 2 digits)
1200V range	±(0.005% of input + 4 digits)
90 days, 18°C–28°C	
200 mV range	±(0.01% of input + 10 digits)
2V–200V range	±(0.01% of input + 3 digits)
1200V range	±(0.01% of input + 6 digits)
Temperature Coefficient	
0°C–18°C, 28°C –50°C	
200 mV range	±(0.0007% of input + 3 digits)/°C
2V range	±(0.0007% of input + 1 digit) /°C
20V–200V range	±(0.0007% of input + 1 digit) /°C
1200V range	±(0.0007% of input + 1 digit) /°C
DC Input Resistance	
200 mV–20V range	≥1000 megohms
200V–1200V range	10 megohms
Normal Mode Noise Rejection	≥60 dB @ 50 Hz and 60 Hz
Common Mode Noise Rejection	≥120 dB @ dc to 60 Hz (with 1 kΩ in either lead)
Resolution	1 μV on 200 mV range
Ranging	Full autoranging or manual ranging
Polarity	Automatic bipolar, + or – display
Overload Protection	200V, 1200V range; ±1200V dc, 1700V peak ac 200 mV–20V range; ±1000V dc, 1400V peak ac
Offset Current (at 23°C)	Less than 15 pA on any range. Temperature coefficient of ±5 pA/°C
Zero Stability	Better than 10 μV for 90 days after 1 hour warm-up
Response Time to Rated Accuracy within Range	1 second maximum to displayed input
ENVIRONMENTAL	
Storage Temperature	–40° C to 75° C
Operating Temperature	0° C to + 50° C
Humidity Range	70% R.H., + 35° C to +50° C 80% R.H., +5° C to +35°C

Table 1-2. 8810A Specifications (cont)

GENERAL	
Function	Selected via front panel controls
Range	Full autoranging or manually selectable via front panel controls
Autorange Rate	600 ms maximum per range change
Display	7 segment 0.3" LED display, automatic decimal location
Reading Rate	2.5 readings per second, within the same range
Overload Indication	Flashing Display of +188888 (built-in segment test of LED display) for out of range indication
MTBF	10,000 hours calculated, minimum
Maximum Common Mode Voltage	1000V dc or peak ac
Maximum LO to GUARD Voltage	100V dc or peak ac
Power	110/230V ac ±10%, 50 or 60 Hz or 100 Vac ±10% 50 Hz, 8 watts
Size	Maximum dimensions (see Figure 1–1) 8,03 cm x 22,86 cm x 36,07 cm (3.16 " high x 9.0" wide x 14.2" long)
Weight	3.0 kg (6.5 pounds)

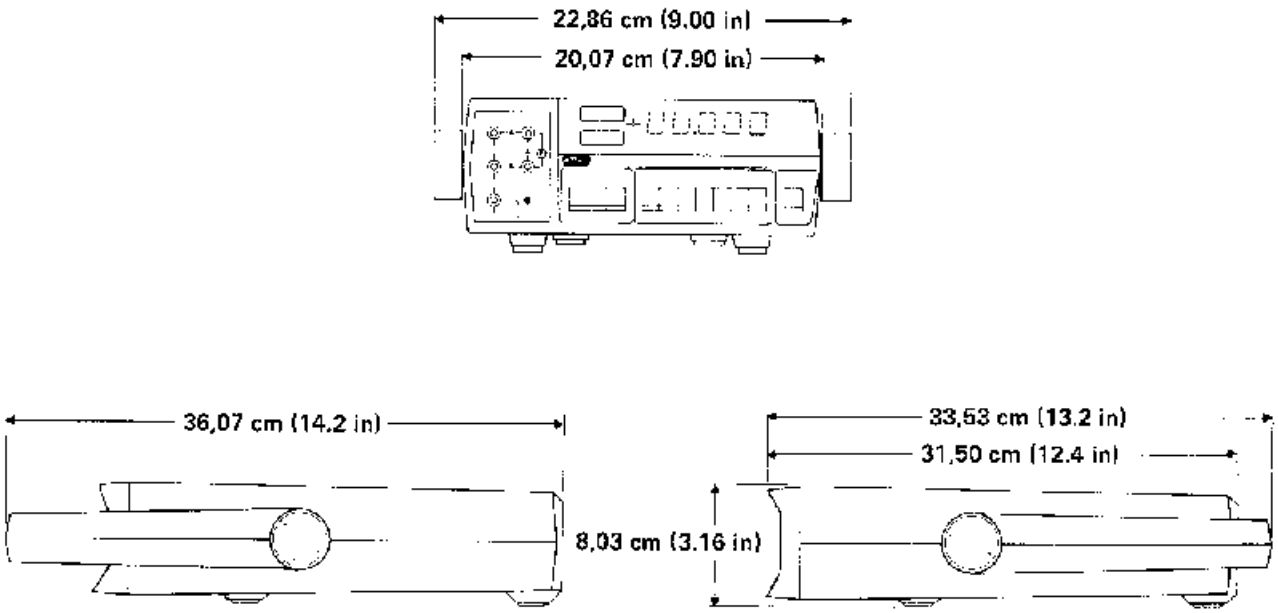

Figure 1-1. Model 8810A Outline Drawing

Table 1-3. Option Specifications

Option –002
Data Output Unit

Available Data	Digits, Polarity (both logic Senses), and Range.
Data Output (form)	Isolated BCD, with compatible TTL/DTL levels.
Data Coding	8–4–2–1 BCD positive-true parallel (negative-true easily obtained by changing output buffers).
Logic Levels	"1" = +5V, "0" = 0V
Drive Capability	All outputs can drive a minimum of two TTL loads, (i.e., sink 3.2 mA).
Flags	Busy, not Busy, and Overload
Controls	External trigger (negative-going edge triggers); External trigger enable (Logic "1" enables external, trig. Logic "0" causes data update at the internal sample rate of approximately 2.5/second); +5V reference.

Option –007
Ohms Converter

Ranges	200Ω, 2 kΩ, 20 kΩ, 200 kΩ, 2000 kΩ, 20 MΩ
Resolution	1 mΩ on 200Ω range
Configuration	Four-terminal measurement on all ranges
Ranging	Full autoranging or manual range
Accuracy	
(24 Hour, 23°C ±1°C)	
200Ω range	±(0.01% of input + 5 digits)
2 kΩ–200 kΩ range	±(0.008% of input + 2 digits)
2000 kΩ range	±(0.02% of input + 2 digits)
20 MΩ range	±(0.05% of input + 2 digits)
(90 day, 18°C–28°C)	
200Ω range	±(0.02% of input +10 digits)
2 kΩ–200 kΩ range	±(0.01% of input + 3 digits)
2000 kΩ range	±(0.05% of input + 3 digits)
20 MΩ range	±(0.2% of input + 3 digits)
Temperature Coefficient	
200Ω range	±(0.001% of input + 3 digits)/° C
2 kΩ - 200 kΩ range	±(0.001% of input + 1 digit)/° C
2000 kΩ range	±(0.005% of input + 1 digit)/° C
200 MΩ range	±(0.02% of input + 1 digit)/° C

Range	200Ω	2 kΩ	20 kΩ	200 kΩ	2000 kΩ	20 MΩ
Maximum Current Through Unknown	1 mA	1 mA	250 μA	25 μA	2.5 μA	0.25 μA

Overvoltage Protection	300V rms or dc, applied continuously to any range
Maximum Open Circuit Voltage	3.3 volts
Response Time	
200Ω–200 kΩ range	1.0 second maximum to displayed input
2000 kΩ and 20 MΩ range	3.0 seconds maximum to displayed input

Table 1-3. Option Specifications (cont)

Option –008
AC Converter

Ranges	2V, 20V, 200V, 750V
Accuracy	
2V–200V ranges (100% to .1% of range)	
24 Hour, 23°C ±1°C	
100 Hz–10 kHz	±(0.05% of input +10 digits)
45 Hz–100 Hz, 10 kHz–20 kHz	±(0.1% of input +20 digits)
20 kHz–100 kHz	±(1.0% of input +60 digits)
90 days, 18°C–28°C	
100 Hz–10 kHz	±(0.1% of input +10 digits)
45 Hz–100 Hz, 10 kHz–20 kHz	±(0.25% of input +20 digits)
20 kHz–100 kHz	±(1.0% of input +60 digits)
750V range (100% to .1% of range)	
90 days, 18°C–28°C	
(1V to 500V input)	
100 Hz–10 kHz	±(0.15% of input +20 digits)
45 Hz–100Hz, 10 kHz–20 kHz	±(0.25% of input +40 digits)
(500V to 750V input)	
100 Hz–10 kHz	±(0.3% of input +20 digits)
45 Hz–100 Hz, 10 kHz–20 kHz	±(0.5% of input +40 digits)
Temperature Coefficient (0°C–18°C, 28°C–50°C)	±(0.008% of input + 2 digits)/°C, 2V–200V range ±(0.008% of input +4 digits)/°C, 750V range
Input Impedance	2 megohms shunted by less than 100 pF
Response Time to Rated Accuracy within Range	1.5 second maximum to displayed input
Ranging	Full autoranging or manual ranging
Overload Protection	750V dc or rms sinewave, not to exceed 2×10^7 volts hertz product.
Resolution	10 μV on 2V range

Option –009
True RMS Converter

Ranges	2V, 20V, 200V, and 750V
Resolution	10 μV
Accuracy	
24 Hours, 23°C ±1°C, 1%–100% of range	
45 Hz–100 Hz	±(0.25% of input +100 digits)
100 Hz–20 kHz	±(0.15% of input +100 digits)
20 kHz–50 kHz	±(0.20% of input +150 digits)
50 kHz–100 kHz	±(0.80% of input +300 digits)
90 days, 18°C–28°C, 1% – 100% of range	
45 Hz–100 Hz	±(0.40% of input +100 digits)
100 Hz–20 kHz	±(0.20% of input + 100 digits)
20 kHz–50 kHz	±(0.40% of input +150 digits)
50 kHz–100 kHz	±(1.00% of input +300 digits)

Table 1-3. Option Specifications (cont)

Temperature Coefficient	±(0.02% of input + 5 digits)/°C
Maximum Input	750V rms, 1100V peak or 10^7 volts hertz
AC Input Impedance	1 MΩ in parallel with 100 pF
Crest Factor	3.0
Response Time	1.5 seconds
Overload Protection	500V dc or 750V rms or 1100V peak
Ranging	Full autoranging or manual ranging