High Frequency Option (API-30702) Available (contact factory)

SYNCHRO AND RESOLVER ANGLE INDICATOR

DESCRIPTION AND APPLICATIONS

The SR-203 and HSR-203 are improved high quality angle indicators used in precision synchro and resolver test equipment. They accept synchro or resolver signals from a front panel input channel or either of two rear connector input channels. Output data, formatted to BCD angle information, is provided and displayed on the front panel. Both models are enclosed bench-type instruments, with a carry handle, which may be used as a tilt stand. Control functions, such as input channel select, input type, bandwidth, unipolar/bipolar, lamp test and inhibit, may be controlled either manually by front panel switches or remotely with control logic to the rear connector. A single switch multiplexes control between local and remote sources and front panel and rear connector input channels. An internal IEEE-488 data bus interface is available as an option. The SR-203 and HSR-203 instruments differ only in their accuracy and resolution. The SR-203 is accurate to ± 0.03°, while the HRS-203 is accurate to ±.005°. Resolution for the devices is ±0.01° and ±0.001° respectively (see Specifications). Because they can accept a broad range of voltages and frequencies, without programming, and signal to reference phase shifts of ± 50° (max), the SR-203 and HSR-203 are ideal for situations where a variety of inputs must be quickly accomodated. Using a type II servo loop for continuous tracking, these instruments have no velocity lag up to the specified tracking rates. There can be no hangup 180° away from the input angle. A fault indicator shows when the unit is not tracking the input signal, and an ambiguity indicator shows when the output data is changing. The SR-203 and HSR-203 require no adjustments or calibrations and logic is TTL compatible. The SR-203 and HSR-203, in addition to serving as high performance bench instruments, can be used wherever accurate angle information is required for display, control, testing purposes, or computation. Applications include production testing of synchros and resolvers, information translators in quality control systems, machine tool control, ship and aircraft navigation systems and antenna positioning. The IEEE-488 adapter option is convenient for interfacing these units with other instruments for automatic test equipment (ATE).

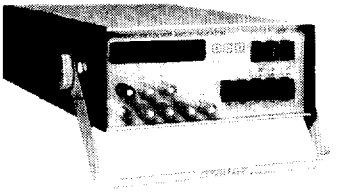

FEATURES

- *RESOLUTION TO .001°*
- *FRONT PANEL CONTROLS*
- *OPTIONAL IEEE-488 I/O*
- *FAULT INDICATOR*
- *PHASE SHIFT COMPENSATION*
- *BROADBAND (47-1000 Hz)*

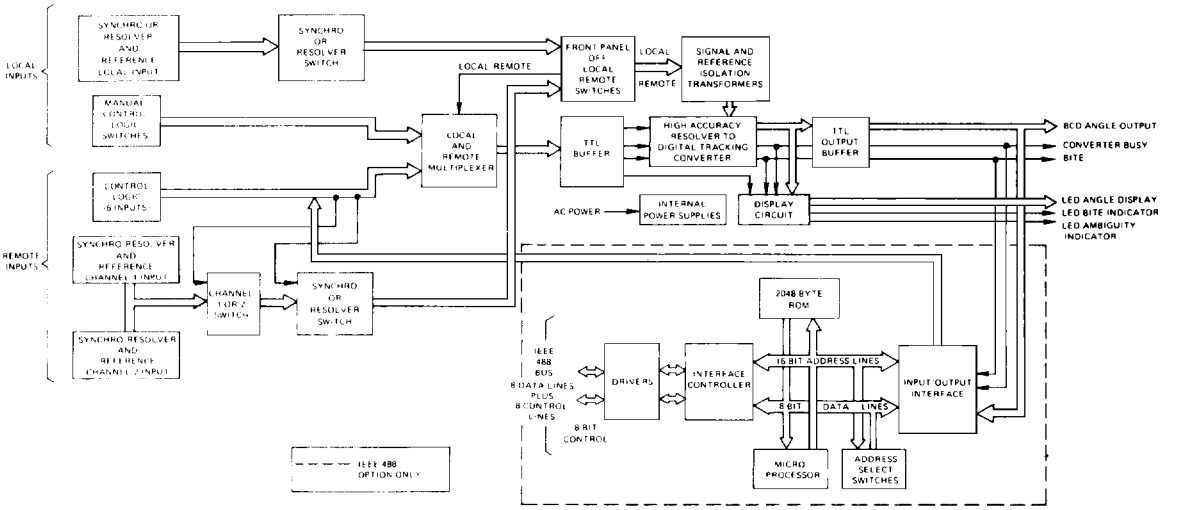

FIGURE 1. BLOCK DIAGRAM

SPECIFICATIONS

PARAMETER	UNITS	VALUE	
		SR 203	HSR 203
RESOLUTION	deg	0.01 (5 BCD digits)	0.001 (6 BCD digits)
ACCURACY (all causes)	deg	±0.03	±0.005
REPEATABILITY	deg	Within 0.01	Within 0.002
ANGLE RANGE (Continuous Rotation)			
Unipolar	deg	0 to +359.99	0 to +359.999
Bipolar	deg	0 to ±179.99	0 to ±179.999
DISPLAY			
7 Segment 0.43" LED		5 Digits	6 Digits
REFERENCE INPUT			
Input Type		Transformer isolation	
Voltage Level	V	10 to 150 rms	
Frequency	Hz	47 to 1000	
Input Impedance	Ω	100k min	
Breakdown Voltage	V	1000 min to logic ground	
Harmonic Content	%	±10 max	
SIGNAL INPUTS			
Input Type		Synchro or resolver, transformer isolated	
Line to Line Voltage	V	Auto leveling 10 to 100	
Frequency	Hz	Same as Reference	
Allowed Phase Shift	deg	±50 max relative to reference	
Input Impedance			
SR 203	Ω	150k min at 47 Hz	
	Ω	250k min between 60 and 1000 Hz	
HSR 203	Ω	1M min	
Breakdown Voltage	V	1000 min to logic ground	
DYNAMIC CHARACTERISTICS		SR 203	HSR 203
Tracking Rate (Full Accuracy)			TRACKING / SLEW
400 Hz	deg/sec	720	72 / 720 max
50 to 60 Hz	deg/sec	180	18 / 180 max
Settling Time (To Within 1 LSB)			
Lo Bandwidth (47 to 1000 Hz)	sec	1.7	2
Hi Bandwidth (360 to 1000 Hz)	sec	0.6	1.5
Open Loop Transfer Function			
$G = \frac{A^2\left(\frac{S}{B}+1\right)}{S^2\left(\frac{S}{10B}+1\right)^2}$			
Lo Bandwidth (47 to 1000 Hz)		A = 18 B = 10	A = 13 B = 10
Hi Bandwidth (360 to 1000 Hz)		A = 86 B = 46	A = 42 B = 21
DIGITAL INPUTS (TTL Compatible)			
Loading		0.5 std TTL loads max	
Inhibit (INH)		"1" or open = track "0" or GND = inhibits	
Bandwidth Selector (BW)		"1" or open = 47 to 1000 Hz (Lo Bandwidth) "0" or GND = 360 to 1000 Hz (Hi Bandwidth)	

PARAMETER	UNITS	VALUE
DIGITAL INPUTS (TTL Compatible)		
Loading		0.5 std TTL loads max
Inhibit (INH)		1 or open = track 0 or GND = inhibits
Bandwidth Selector (BW)		1 or open = 47 to 1000 Hz (Lo Bandwidth) 0 or GND = 360 to 1000 Hz (Hi Bandwidth)
Unipolar/Bipolar Selector (U/B)		1 or open = unipolar operation (0 to 360°) "0" or GND = bipolar operation (-180° to +180°)
Lamp Test		1 or open = normal operation 0 or GND = all LED segments on
Remote Channel Select		1 or open = channel 2 0 or GND = channel 1
Remote Synchro/Resolver Select		1 or open = resolver 0 or GND = synchro
DIGITAL OUTPUTS (TTL Compatible)		
Drive Capability		4 std TTL loads buffered output
Synchro or Resolver Angle		Parallel data bits, BCD angle, positive logic, MSB becomes minus sign for bipolar operation. SR203 has 5 decades, 18 lines. HSR203 has 6 decades, 22 lines
Converter Busy		4 μsec positive pulse, leading edge initiates conversion, indicates tracking failure from any cause (including excessive speed or equipment malfunction). 1 = fault
FRONT PANEL FUNCTIONS		
Local/Remote Select		Select input panel from front panel or rear connector
On/Off		Main power control
Lamp Test		ALL LED segments on
Inhibit		Inhibits converter tracking
Synchro/Resolver		Controls applicable for local mode (front panel inputs only): Synchro or Resolver select
Bandwidth		Select between Hi and Lo bandwidths
Readout		Selects between unipolar and bipolar display and output
FRONT PANEL INPUTS TERMINALS		
Local Signal Inputs		
S1		Synchro/Resolver
S2		Synchro/Resolver
S3		Synchro/Resolver
S4		Resolver only
Local Reference Inputs		
RH		Reference HIGH
RL		Reference LOW
DIG GND and CASE		Digital and case ground respectively
POWER INPUT		
Voltage	Vrms	115/230, selectable via two internal switches (set for 115V unless otherwise specified).
Power	VA	20 max
Frequency	Hz	47 - 500
Isolation		Transformer
Breakdown Voltage (To Logic Gnd)	VDC	1000
TEMPERATURE RANGES		
Operating	°C	0 to +55
Storage	°C	-55 to +125
PHYSICAL CHARACTERISTICS		
Size	in	14.5 x 8.125 x 3.5 (368 x 201 x 89 mm)
Weight	lbs	11.0 (4.9 Kg)

REAR CONNECTOR

PIN CONNECTION TABLE

PIN	FUNCTION
1	Spare Pin
2	Spare Pin
3	Case GND
4	Digital GND (may be connected to case GND)
5	S1
6	S2 } Remote Channel 1 inputs
7	S3 } (S4 for Resolver use only)
8	S4
9	REF HI } Channel 1 Ref input
10	REF
11	Converter Busy Output 1 = Data Stable 0 = Converter Busy
12	.04°
13	.01°
14	8°
15	2°
16	4°
17	1°
18	Spare Pin
19	Lamp Test Input* 1 = Normal Operation 0 = Lamp Test (Remote Mode)
20	Channel 1/Channel 2 Inputs* 1 = Channel 2 0 = Channel 1
21	S1 } Channel 2 inputs
22	S2 } (S4 for Resolver use only)
23	S3 }
24	S4
25	REF HI } Channel 2 Ref Input
26	REF LO
27	Inhibit Input* 1 = Track 0 = Inhibit
28	.02°
29	.08°
30	1°
31	4°
32	2°
33	8°
34	Reset Input (TTL logic) 1 = Normal Operation } IEEE Interface 0 = Reset
35	Unipolar/Bipolar Output 1 = Unipolar } Remote Mode 0 = Bipolar
36	Local/Remote Output 1 = Local Mode 0 = Remote Mode
37	Synchro/Resolver Input* 1 = Resolver } Remote Mode 0 = Synchro
38	Unipolar/Bipolar Input* 1 = unipolar } Remote Mode 0 = bipolar
39	Bandwidth Input*
40	BITE Output 1 = Not Tracking (fault) 0 = Normal Tracking
41	.008°
42	.004°
43	.002°
44	.001°
45	20°
46	40°
47	80°
48	10°
49	100°
50	Unipolar = 200° Bipolar = 1 = minus sign (-)

* The User must supply digital input signals for standard (Non-IEEE-488) units. For units including the IEEE-488 interface option, these pins *must not* have external connections

TECHNICAL INFORMATION

Both SR-203 and HSR-203 instruments are available with an IEEE-488 Data Bus Interface circuit built in (see Figure 1). This option must be specified when the instruments are ordered. Add "-488" to the part number as shown in ORDERING INFORMATION.

The IEEE-488 option provides the capability to process signals received from or transmitted to a parallel data bus as described in the IEEE-488 Data Bus Standard of 1975. When programmed to operate with the "488" Data Bus Controller, the SR/HSR-203-488 will perform the command sequences shown in Figures 2 and 3.

In the talk routine (Figure 2), the instrument transmits a sign byte (+, – or E for error) followed by 5 (for SR-203) or 6 (HSR-203) BCD ASCII data bytes, followed by CR (carriage return), followed by LF (line feed), with EOI (End or Identify), when interrogated by the controller.

Figure 4 indicates the possible ASCII control words that would be transmitted from a controller to the instrument as shown in the listen routine (Figure 3).

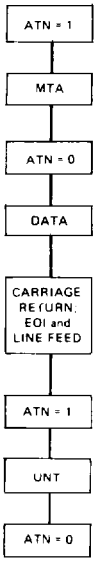

FIGURE 2. COMMAND SEQUENCE FOR TALKING

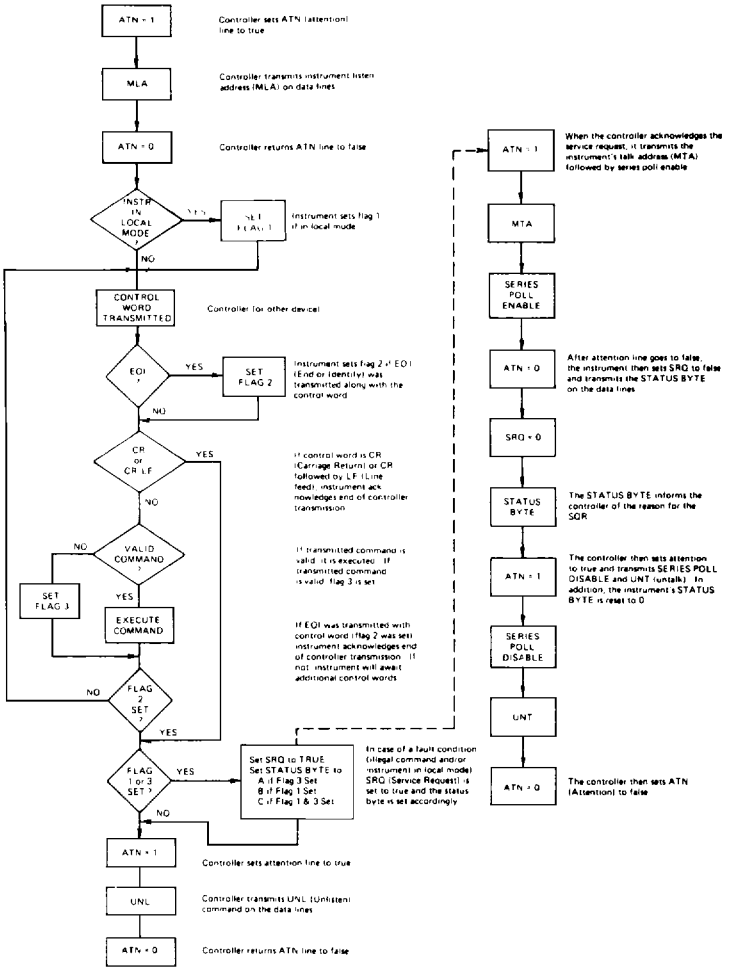

FIGURE 3. COMMAND SEQUENCE FOR LISTENING

COMMAND FUNCTIONS FOR IEEE-488 OPTION

NOTE: 1. IEEE-488 Interface will accept all input commands, regardless of input mode selected (local or remote). When the instrument is switched to Remote mode, the last commands received will take effect.

2. The SR–203 is controlled exclusively by front panel switching when local mode is selected. Lamp test switch will illuminate all LED segments regardless of input mode.

CONTROL WORD (ASCII)	FUNCTION
P (Preset)	Preset to: Channel 1, Synchro input, No inhibit, No lamp test, High bandwidth, Unipolar Output
S (Synchro), R (Resolver)	Sets Synchro or Resolver input mode
1 (Channel 1), 2 (Channel 2)	Selects between remote Input channels 1 and 2 on rear connector
H (High), L (Low)	Select high or low bandwidth
U (Unipolar), B (Bipolar)	Selects unipolar or bipolar readout and output
I (Inhibit), F (Follow)	Inhibits the converter or allows it to follow (track) the input
T (Test), D (Data)	Tests lamps (T) or display data (D)

FIGURE 4. CONTROL CODE FUNCTIONS

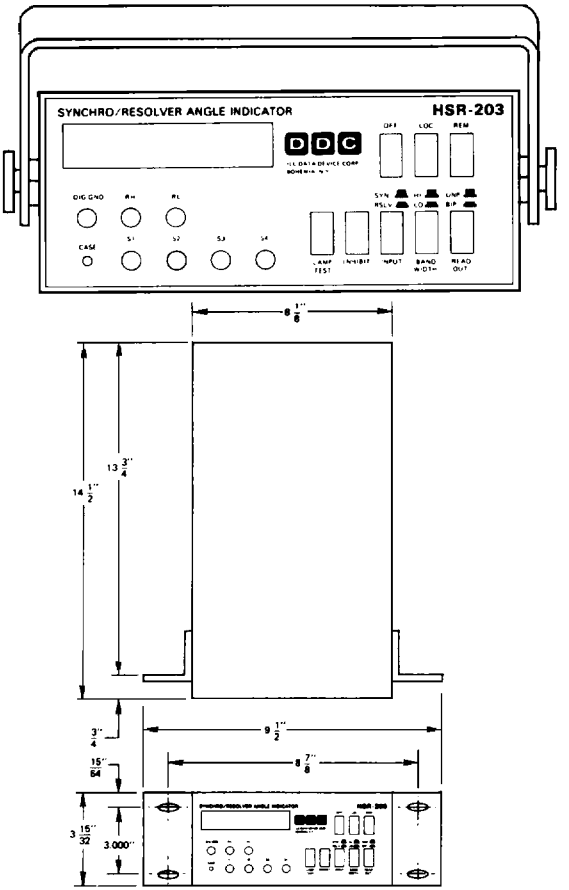

OPTION 2 Half Rack Mount

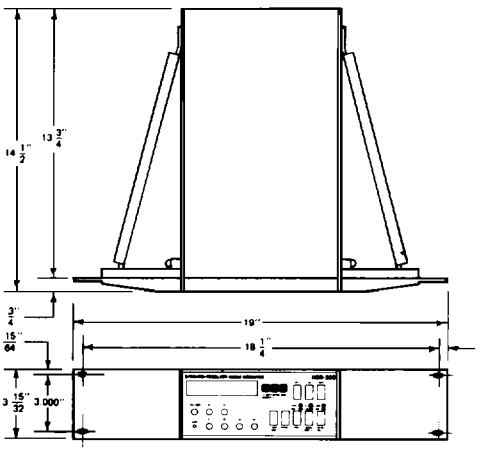

OPTION 3 Center Mount 19" Panel

POWER CONNECTOR EAC 301 SWITCHCRAFT

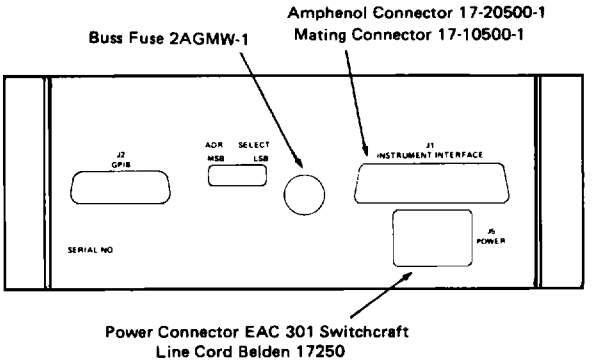

ORDERING INFORMATION

SR – 203 – 1 – DBA-488

- IEEE-488 Option:
  488 = Built-in IEEE-488 Interface
- Configuration Options:
  Blank = SR-203
  1 = Standard option 1 carryhandle
  2 = Option 2 half-rack mount
  3 = Option 3 center mount on 19" panel
- Accuracy (worst case, all causes)
  SR = ± 0.03°
  HSR = ± 0.005°

High Frequency Option (API-30702) Available (contact factory)

All instruments are supplied with a mating connector, a detachable line cord and instruction manual.

D

THIS PAGE INTENTIONALLY LEFT BLANK