solartron analytical

1250 Series Frequency Response Analyzers

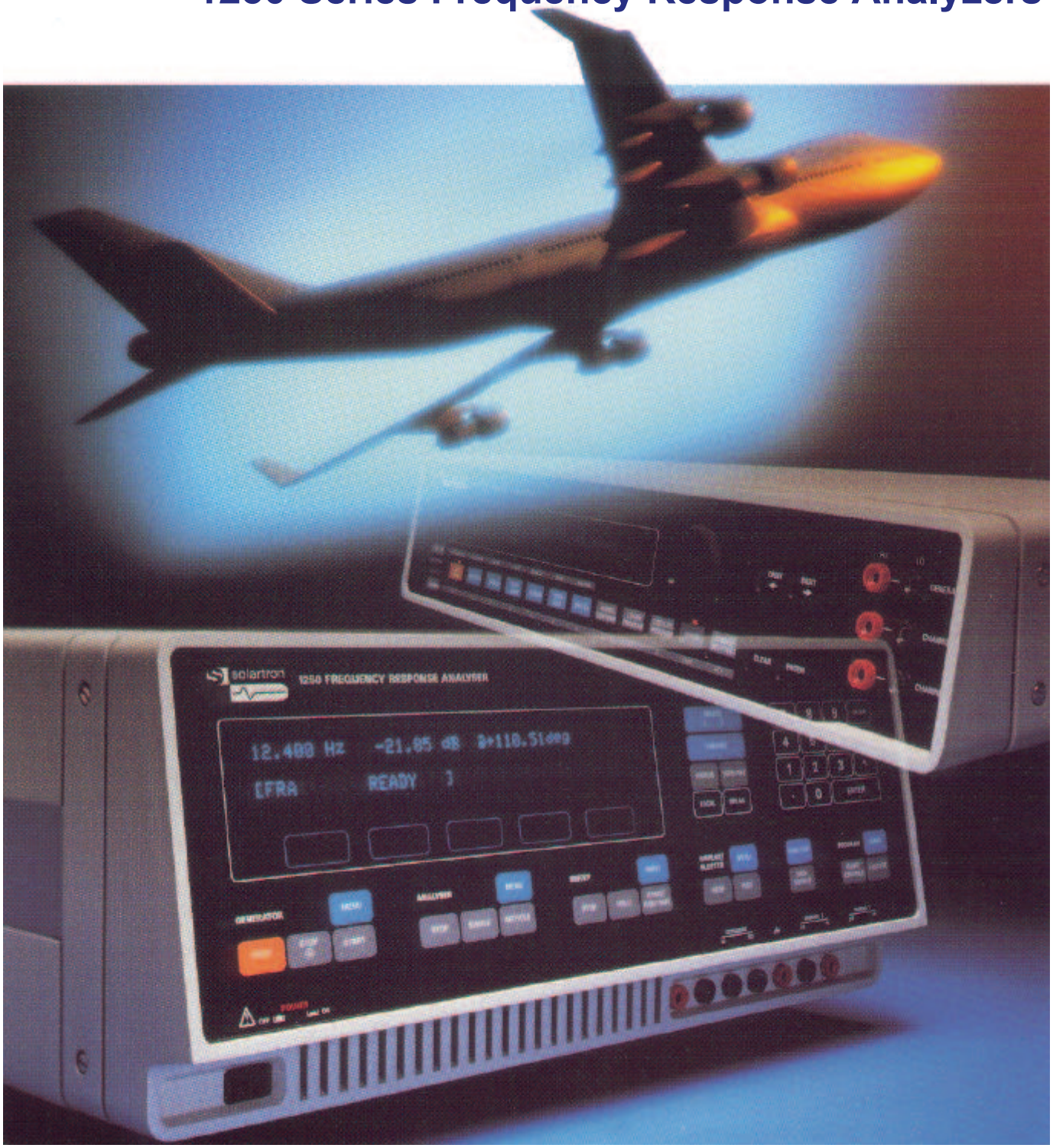

1250 series

Measurement capability

The 1250 series - Frequency Response Analyzers that will meet your needs today and in the future. Using the 'Single Sine' measurement technique they provide precise measurement of gain and phase between any points in a dynamic or electrical system. This technique is recognised as the one which can implement the most searching analysis with which to assess performance, or characterise both simple and complex systems.

The 1250 Series Frequency Response Analyzers apply the power and sophistication of modem measurement technology; simple in concept, fast and precise in performance.

PHYSICAL INTERPRETATION
The resulting gain and phase parameters are easily related to physical features, thus enabling performance to be optimised with minimum trial and error.

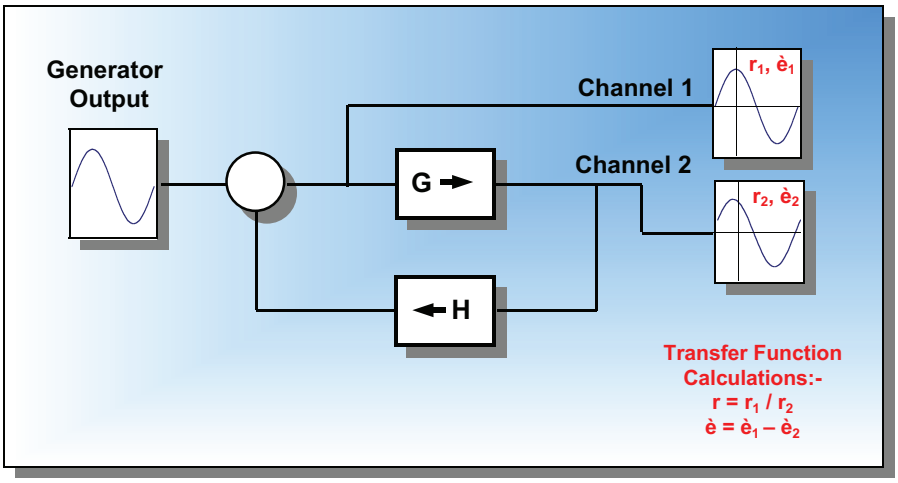

DYNAMIC RANGE
The large dynamic range of the analysis system together with the high frequency resolution of the generator allow measurements to be made on filters with sharp cut-offs and high attenuation characteristics for out of band signals.

NON-LINEAR SYSTEMS
The correlation technique which is part of the analysis process enables distorted signals, or non- linear systems, to be analysed both accurately and efficiently.

ACCURATE MEASUREMENT
The device under test is stimulated by a sinewave and the response analysed at one, two or more points in the system. These responses are correlated with the stimulus to determine the amplitude and phase relative to the generator. The ratio of the two measured signals can then be calculated to provide the system transfer function.

This process rejects all harmonics and, by increasing the integration time, even signals which are buried in noise can be measured accurately.

1250 series

The complete range of Frequency Response Analyzers.....

1250 / 1250B / 1254 FRAs

For testing the design of servo systems, hydraulic actuators, power supplies, modems, acoustic devices, rotating machinery, cables, amplifiers, filters and other electronic devices.

- ⇒ Frequency Range 10µHz to 65kHz
- ⇒ 0.2%, 0.2deg accuracy
- ⇒ two voltage measurement input channels (the 1254 version has four input channels)
- ⇒ 1250B is designed for operation from computer and has the same specification but no display and keyboard
- ⇒ Options:- synchroniser, mod/demod, auxiliary generator

1253 FRA

For lower frequency production tests on servo systems, power supplies, modems, acoustic devices and electronic applications.

- ⇒ Frequency Range 1mHz to 20kHz
- ⇒ 1%, 1deg accuracy
- ⇒ Two voltage measurement input channels
- ⇒ Built in synchroniser and mod/demod
- ⇒ Low cost frequency response analyser

1255A / 1255B FRAs

For high frequency electronic applications, for example in the design of electronic filters or switch mode power supplies.

- ⇒ Frequency Range 1255 – 10µHz to 20MHz
- ⇒ Frequency Range 1255B – 10µHz to 1MHz
- ⇒ Unrivalled 0.2%, 0.2deg accuracy to 1MHz
- ⇒ two voltage measurement input channels
- ⇒ synchroniser and mod/demod are not available on this unit
- ⇒ 1255B is designed for operation from computer and has the same specification but no display and keyboard

PC Software for electronic applications

"FRA" – Windows ™ software package for use with any Solartron FRA. Requires Windows 3.1 or 95 and a National Instruments IEEE card.

- ⇒ Easy to operate
- ⇒ Sweeps frequency and collects results from 1,2, or 4 channel FRAs.
- ⇒ Plots transfer function magnitude and phase on frequency or time x-axis
- ⇒ Results can be printed on any Windows ™ printer
- ⇒ Stores results in text format ready to export to other software packages

1250 series

Servo control systems

DESIGN
The response of the servo to a sinusoidal input can tell us a great deal about its characteristics and performance. It indicates the range of stability and allows an estimate of the gain and phase margins to be made to ensure that these are within acceptable limits.

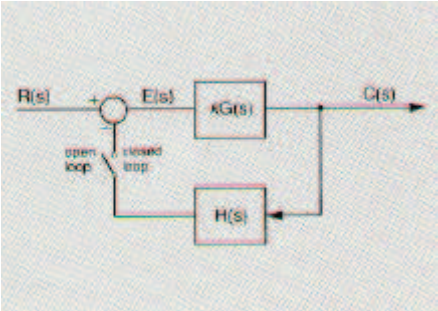

The 1250 Series Frequency Response Analysers are designed to provide the control systems design engineer with an optimised measurement system to analyse the performance parameters of servo systems, hydraulic actuators, electromechanical components, etc. Its unique method of single sine correlation ensures that the fundamental components of the system response are analysed, without corruption by associated harmonic and noise signals.

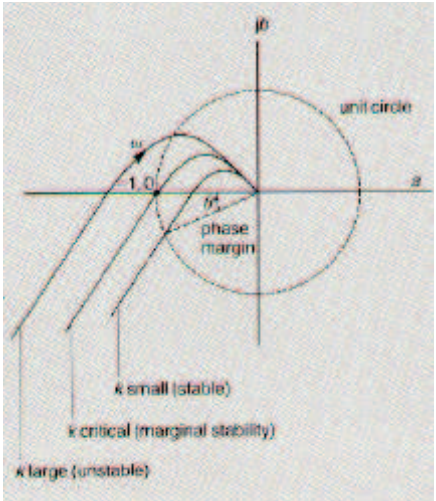

The control system can be analysed throughout its entire frequency range, including the very low frequencies required to establish the zero phase shift point. The parallel input channels of the 1250 enable multiple points within the system to be analysed simultaneously, allowing analysis of the complete system and its sub-assemblies at the same time. Measurements of all input channels can be completed within one period of the stimulating frequency or 10ms, whichever is the longer.

Modulator Demodulator
The optional modulator/ demodulator interfaces the 1250 to ac carrier systems. Individual switching of either the modulator or demodulator, and full control of the analysis channels that are being demodulated, ensure the multi-channel flexibility. The response of the systems, ac components, dc components, and indeed the integral system modulators and demodulators can all be measured at the same time.

Synchroniser
If it is required to measure the phase shift in the carrier system itself, then it is necessary that the generator of the frequency response analyser is locked to the carrier in both frequency and phase. This is accomplished using the optional synchroniser, which operates over the full frequency range of the instrument. The synchroniser also enables the generator to be locked to a rotating or reciprocating component, and measurements can then be made relative to this.

PRODUCTION
Frequency response testing of control system components has been proved to be fast and efficient. Measurements taken at five or six selected frequencies will confirm the components conformance to specification, or otherwise. This type of testing tends to be less demanding on the specification of the instrument than the design role, but requires a simple front panel layout and straightforward operation. The price of the instrument is also important. For effective production use it must prove cost effective when used at a number of work stations. The 1253 Gain/ Phase Analyzer was designed to meet these requirements. Its unique front panel programming, with test routines permanently stored in EEPROM, can simplify operation to a single front panel control. Comprehensive test programs can easily be setup, and then protected, which will operate either in a completely automatic mode or with varying degrees of manual intervention.
Alternatively, the 1253 can be used in conjunction with a controller for completely automatic operation, via the IEEE 488 interface.

MAINTENANCE
The requirements of an instrument in the maintenance environment are similar to those of production. However, there is more emphasis on simplicity of operation. A great deal of time is wasted if the operating manual must be consulted each time before the instrument can be used. The 1253 has proved itself to be ideal for use in maintenance areas, either in manual test units or automatic test systems.

1250 / 1254

SPECIFICATION:

GENERAL
The 1250B is exactly the same as the 1250, except that the 1250B has no built in display and front panel control keys.

The 1250 and 1250B have two analyzer channels and the 1254 has four channels.

GENERATOR
Identical specifications apply to the optional additional sine (12506B and C) and cosine (12506A) generators.
Waveform sine, square, triangle

Frequency
Range: 10μHz to 65kHz
Resolution: 1 in 65535
Error: <0.01 %
Sweep: logarithmic, up or down
linear, up or down, harmonic

Amplitude
Range: 10mV to 10.23V
(Triangle: 5.11V)
Resolution: 1 in 1023
Error: <1 % ± 1 digit

Bias
Range: -10.23 to +10.23V
Resolution: 1 in 1023
Error: <1%± 1 digit
Distortion: <2%
Maximum output
(bias + signal): 15V peak
(1250N): 20V peak
Output impedance: 50Ω+2%
(1250N): <1Ω
Maximum voltage, Lo to ground: 150V
Impedance, Lo to ground: 100kΩ, 100pF
Stop control: Immediate, or at
0º, 90º, 180º, 270º
Stop input: contact closure or TTL logic 0
Connection
Rear: floating, BNC
Output is short-circuit proof

ANALYZER

Nominal Range	Sensitivity	Full scale pk input	Com. mode rejected
30mV	1 μV	45mV	30V
300mV	10μV	500mV	30V
3V	100μV	5V	30V
30V	1mV	50V	500V
300V	10mV	500V	500V

Sensitivity is for integration time >100ms
Maximum input, Hi or Lo to ground:
500V peak, 300V rms
Coupling: dc or ac (< 1 dB at 2.5Hz)

Input configuration
Connection Rear: differential, BNC
Impedance, Hi or Lo to ground: 1MΩ/<100pF
Common mode rejection, dc coupling, up to 100Hz:
up to 50V peak: >65dB
over 50V peak: >60dB
Cross channel isolation, 1 kΩ across inputs
up to 10kHz: >100dB

Integration time
minimum: the longer of 1 cycle or 10ms
maximum: 10^6 cycles or 10^5s

Auto-integration
minimum: the longer of 3 cycles or 1.5s
maximum: the programmed int. time
Variance in results, at 90% confidence:
long int. (signal >0.02% range): <1%
short int. (signal >0.2% range): <10%

Measurement delay
Variable from zero to 10^6 cycles or 10^5s

LIMIT OF ERROR
Input > 10% full scale
Integration time >200ms
Valid for 1 year

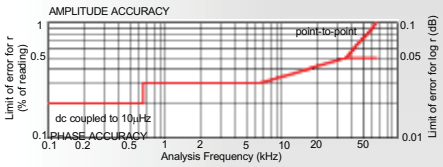

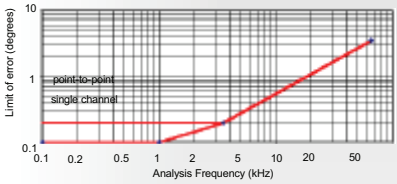

DISPLAY
Presentation: a+jb or r,θ or logr,θ
Resolution: a,b and r: 5 digits + exp
logr: 0.01dB
θ (degrees): 0.01°
θ (radians): 0.1mrad

INTERFACES
GPIB: compatible with IEEE 488 (1978)
Switch selectable Talker / Listener or Talk only

SYNCHRONISER Option 12501
Input configuration
Connection: differential, rear terminals
Coupling: dc or ac (<3dB at 3Hz)
Impedance, Hi / Lo to grnd: >200kΩ, <100pF
Common mode rejection,
dc coupling, up to 100Hz: >50dB
maximum rejected: 20V
Maximum input, Hi or Lo to ground:
350V peak, 250V rms

Synchronisation
Frequency range: 1 mHz to 65kHz
Sensitivity: 0.25V
Level adjustment: ±5V in steps of 0.02V
Time to synchronise: the longer of 4 cycles or 500ms

MODULATOR-DEMODULATOR
Option 12502
Input configuration
Two independent carrier inputs.
Connections: differential, rear terminals
Coupling: ac
Impedance, Hi or Lo to ground: >100kΩ
<100pF
Common mode rejection, up to 100Hz:
>50dB
Maximum common mode: 300V
Maximum input, Hi or Lo to ground:
350V peak, 250Vrms

Carriers 1 and 2
Frequency range: 48Hz to 20kHz
Voltage range: 6V to 250V rms

Generator output
May modulate either carrier 1 or carrier 2.
Carrier phase shift, 50Hz to 300Hz: <3º
300Hz to 3kHz: <1º
3kHz to 20kHz: <6º

Analyzers
Either carrier may demodulate any analyzer.
Quadrature rejection, 1250 and 1254: >26dB
1251: >14dB
Additional errors when demodulating:
Mod frequency = 0.05 x carrier.
Input > 10% full scale, int. time 200ms
r: <0.5% / <0.05dB
θ single channel: <0.5º
θ point to point: <1º

GENERAL
Power supply, switch selectable:
90 to 127V, 188 to 265V
Supply frequency: 45 to 440Hz
Consumption: with no options: 130VA
with all options: 210VA
Dimensions: height: 176mm (6.93ins)
width: 432mm (17ins)
depth: 573mm (22.56ins)
weight: 18kg (40lbs)
rack size: 19in. 4U

1255

SPECIFICATION:

1255A / 1255B
The 1255A and 1255B FRAs have the same specification, except that 1255B can only be controlled from a computer (it does not have a built-in display and keyboard), and the 1255B is limited to 1MHz frequency range.

GENERATOR
Waveform: sine

Frequency range (1255): 10µHz to 20MHz
Frequency range (1255B): 10µHz to 1MHz

Resolution,

10µHz to 655.36Hz	10µHz
655.36Hz to 6.5536kHz	100µHz
6.5536kHz to 65.536kHz	1mHz
65.536kHz to 655.36kHz	10mHz
655.36kHz to 6.5536MHz	100mHz
6.5536MHz to 20MHz	1Hz

Frequency Error: <0.01%
Frequency stability (24hrs, ±1°C): 10ppm
Amplitude, 10MHz: 0 to 3Vrms
>10MHz: 0 to 1Vrms
Resolution: 5mV

Error, (driving open circuit):
±(5%+1%/MHz+5mV)
Distortion: <2%

Bias
Range: ±40.95V
Resolution: 10mV
Error, (driving open circuit): <1%± 1 digit

Sweep
Types: frequency (log and linear)
amplitude (linear)
bias (linear)
Resolution, frequency: >10,000pts
amplitude or bias: >200pts

Maximum Current: ±100mA

Maximum voltage, Lo to ground: ±0.4V

Output impedance: 50Ω+2%
Impedance, Lo to ground: 100kΩ, 10nF
Connection:
single BNC, outer floating to ±0.4V
Output is short-circuit proof
Output disable:
contact closure or TTL logic 0

ANALYZER
Two independent analyzers operating in parallel

Range	Sensitivity (dyn range)	Full scale peak input	Com mode rejected
30mV	1µV (90dB)	45mV	5V
300mV	10µV (90dB)	500mV	5V
3V	100µV(90dB)	5V	5V

Input protected to: ± 46V peak
Connections: separate Hi and Lo BNC connectors
Configurations:
differential, BNC outers floating
differential, BNC outers s/c to ground
single ended, BNC outers floating
single ended, BNC outers s/c to ground

Coupling: dc or ac (-3dB at 1Hz)

Impedance, Hi to outer: 1MΩ±2%,<35pF
Outer to ground: 10kΩ, <330pF

Common mode rejection (at 1MHz): >50dB
Cross channel isolation (at 1MHz): >100dB

Integration time: 0.01s to 10^5s, or auto

DISPLAY
Functions
variable: frequency, amplitude, dc bias
measured: V1, V2, V1/V2, V2/V1
Parameters: a, jb, r, r(dB), θ, group delay
Resolution: r(dB) 0.001
θ 0.01°
all others 5 digits + exponent

INTERFACES
Serial Output: suitable for use with printers compatible with RS232 and RS423

Selectable baud rates: 110, 150, 300, 600, 1200, 2400, 4800, 9600

Parallel: complies with IEEE488 (1978)
Fully programmable talker / listener
Switch selectable talk only for plotting
Maximum data rate: 1000 bytes/s
Functions implemented:
SH1, AH1, T5, TE0, L4, LE0, SR1, RL1, PP2, DC1, C0, DT0
Data format complies with IEEE754 for 4 byte wide data transfer

GENERAL
Power supply, switch selectable:
90 to 126V, 198 to 252Vac
Supply frequency: 48 to 65Hz
Consumption: 200VA

Dimensions:
height: 176mm (6.93ins)
width: 432mm (17ins)
depth: 573mm (22.56ins)
rack size: 4U, 19ins
weight: 18kg (40lbs)

LIMIT OF ERROR

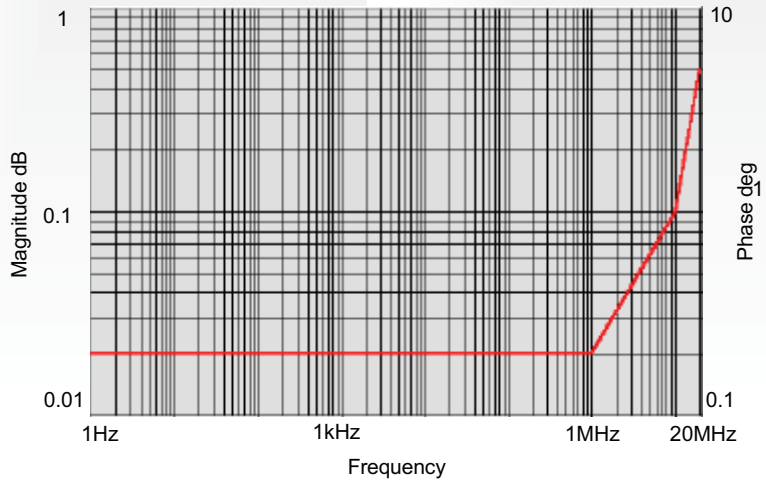

1253

SPECIFICATION:

GENERATOR

Waveform: sine, square.

Frequency

Range: 1mHz to 20kHz
Resolution: 1 in 4000
Sweep type: logarithmic, up or down
Points per sweep: 2 to 9999

Amplitude

Range: 10mV to 10.23Vrms
Resolution: 10mV
Error (driving open circuit): ±1%±10rnV

Bias

Range: ±10.22V
Resolution: 20mV
Error (driving open circuit): ±1%±20mV
Maximum output, Hi to Lo (bias + ac): ±15V
Distortion: <2%

Output impedance (Hi to Lo): 50Ω±10%
Maximum voltage (Lo to ground): ±15V
External stop input: contact closure or TTL logic 0 to kill or freeze

Connection
Front: floating, 4mm
Rear: floating, single BNC
Maximum current: 300mA

Output is short-circuit proof

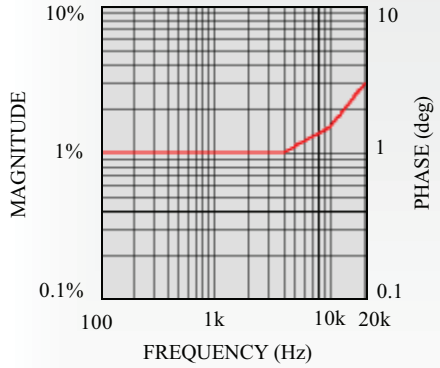

ANALYSER

Two independent, autoranging Input channels, with common analyzer.

Range	Sensitivity	Full Scale pk input	Com.mode rejection
30mV	1 µV	45mV	30V
300mV	10µV	500mV	30V
3V	100µV	5V	30V
30V	1mV	50V	30V
300V	10mV	500V	30V

Maximum input
Hi to ground: ±500V peak, 300V rms
Lo to ground: ±30V peak
Coupling: dc
Connections rear: differential, single BNC Impedance, Hi to Lo (grounded): 1MΩ±2% Capacitance
Rear inputs, Hi to Lo (grounded): <100pF
Common mode rejection, up to 100Hz: >60dB

Integration time
Range: 0.1 to 10^5
Cross channel isolation, < 1kHz, 1kΩ across inputs, Lo grounded: >100dB

LIMIT OF ERROR

Input >10% full scale
integration time >200ms

INTERFACES

Serial output: suitable for use with printers and keyboards compatible with RS232 and RS423
Selectable baud rates: 110 to 9600

GPIB: compatible with IEEE488 (1978)
Fully programmable Talker/Listener
Switch selectable Talk only
Maximum data rate: 1000 bytes / sec
Functions implemented:
SH1, AH1, T5, TE0, L4, LE0, SR1, RL1, PP2, DC1, C0, DT0

SYNCHRONISER

Connection: differential, BNC
Impedance, Hi or Lo to ground. >200kΩ <100pF
Maximum input
Hi to ground: ±350V peak 250V rms
Lo to ground: ±30V
Trigger point: positive zero crossing
Minimum signal to trigger (<1kHz): <-0.6 to >+0.1V
Maximum time to synchronise:
<12Hz 6 cycles
>12Hz 500ms
Accuracy of period measurement: ±1µs
Additional analyzer error (stable trigger signal), transfer function mode:
Gain: 1% + 0.2%/kHz
Phase: 1° + 0.2°/kHz

MODULATOR/DEMODULATOR

Input: differential, single BNC
Impedance, Hi or Lo to ground: >100kΩ, <100pF
Maximum input
Hi to ground: ±350V peak, 250Vrms
Lo to ground: ±30V peak
Common mode rejection, up to 100Hz: >50dB
Carrier frequency range: 48Hz to 10kHz
Phase shift, carrier input to generator output
48Hz to 300Hz: <3°
300Hz to 1kHz: <1°
1 kHz to 10kHz: <(1°+½°kHz)
Additional analysis error when demodulating:
mod freq - 0.05 carrier freq: <1 %, <1°
Analyzer quadrature rejection: >26dB

1253 GENERAL

Power supply, switch selectable:
90 to 110V,
108 to 132V
198 to 242V
216 to 264V
Supply frequency: 48 to 65Hz
Consumption: approx 150VA
Dimensions:
height: 108mm (4.25in)
width: 432mm (17in)
depth: 472mm (18.5in)
weight: 10kg (22lb)
rack size: 19in, 2U

1250 series

1250 OR 1254 ORDERING INFORMATION

Accessories included:
- operating manual
- spare fuses
- rack mount ears
- power cable
- 3 x 4mm test leads

Options:		
	maintenance manual	12502041
	rack mount slider kit	12505B
	Jonathan slide kit	12505C
	Synchroniser	12501A
	Mod Demod	12502A
	Analogue Plotter Int	12503A
	Auxiliary Generators:	
	Cosine	12506A
	In Phase	12506B
	Anti Phase	12506C

1253 ORDERING INFORMATION

Accessories included:
- operating manual
- spare fuses
- rack mount ears
- power cable
- 3 x 4mm test leads

Options:		
	maintenance manual	12530010
	rack mount slider kit	

1255 / 1255B ORDERING INFORMATION

Accessories included:
- operating manual
- Spare fuses
- rack mount ears
- 3 x 1M BNC leads

Options:		
	maintenance manual	12550007
	Accuride rack mount kit	
	Jonathan slide mounting kit	

ENVIRONMENT

(Common to all instruments) Temperature

Operating: 0 to 50ºC (32 to 122F)

Storage: -30 to 70ºC (-22 to 158ºF)

Specification limits: 10 to 30ºC (50 to 86ºF)

Humidity, non-condensing: 95% @40ºC

Vibration: tested in accordance with IEC68 (BS2011)

Safety: designed to comply with IEC348 (BS4743)

FRA PRODUCT RANGE

1255	20MHz 2 channel FRA
1255B	1MHz 2 channel FRA
1250A	65kHz 2 channel FRA
1250E	65kHz 2 channel FRA (CE compliant)
1250B	65kHz 2 channel FRA (blank front panel)
1254	65kHz 4 channel FRA
1253	20kHz 2 channel FRA

Certificate No. 1709

Solartron
Victoria Road, Farnborough
Hampshire GU 14 7PW England
Telephone: +44 (0) 1252 376666
Fax: +44 (0) 1252 543854

Solartron
964 Marcon Blvd., Suite 200
Allentown, PA 18103, USA
Tel: +1 610-264-5034
Fax: +1 610-264-5329
Toll free: 1-800 CALL SOL

Solartron
37 rue du Saule Trapu
9 1 882 MASSY, Cedex, France
Tel: +33 (0)1 69 53 63 53
Fax: +33 (0)1 60 13 37 06

Solartron
Beijing Liaison Office
Room 327, Ya Mao Building
No. 16 Bei Tu Cheng Xi Road
Beijing 100101, PR China
Tel: +86 10-6238 11 99 ext. 2327
Fax: +86 10-6238 4687

Email: lab-info@solartron.com
Web: http://www.solartron.com

B 125001

For details of agents in other countries please contact our Farnborough, UK office.