Specifications

This section lists the electrical, environmental, and physical characteristics of the P6207 FET Probe. Following the specification tables are a series of graphs that characterize impedance by frequency, maximum input voltage by frequency, and typical bandwidth.

Performance Conditions

The electrical performance specifications listed in tables A-1 and A-2 apply to a calibrated probe used with a calibrated oscilloscope system, each operating within the environmental limitations listed in Table A-3.

Performance Verification

Specifications are separated into two categories, warranted specifications, and nominal or typical characteristics.

Warranted characteristics, Table A-1, are guaranteed performance specifications. This manual provides performance verification procedures for these specifications.

Nominal and typical characteristics, Table A-2, are not guaranteed and are provided to characterize the configuration, performance or operation of typical systems.

In any table, supplemental information consists of explanatory notes, setup descriptions, or performance characteristics for which no absolute limits are specified, or that are impractical to verify.

Other specifications do not have verification procedures because the characteristics are stable and unlikely to change, or the equipment required to verify them is extremely expensive or not readily available.

Physical and environmental specifications are not verified in this manual.

Specifications are subject to change without notice.

Table A-1: Warranted P6207 FET Probe Characteristics

Characteristic	Specification	Supplemental Information
Attenuation	10X ± 2% at DC	2.0 VDC input 50 Ω ± 0.5% load.
Output Offset (output zero)	±10 mV	20 to 30° C
Rise Time (probe only)	≤ 100 ps	10% to 90% amplitude

Table A-2: Nominal and Typical Characteristics

Characteristic	Description	Supplemental Information
Aberrations first 300 ps after 300 ps	 +15%, −10% ±5%	(typical) System (probe plus oscilloscope) aberrations using Tektronix TDS 820 Digitizing Oscilloscope
Bandwidth	>4 GHz	(typical) Refer to Figure A-3 for typical frequency response
DC Thermal Drift	≤150 µV/° C	(typical) Probe output voltage
Delay Time	4.25 ns±200 ps	(typical) Probe tip to output connector 50% points of a 250 mV_{p-p} input signal
Dynamic Range	−4 V to +4 V	(typical)
Input Capacitance	<400 fF	(typical) Refer to Figure A-1 for typical input impedance
Input Resistance (probe)	100 kΩ±5% at DC	(typical) Probe operating Refer to Figure A-1 for typical input impedance
Linearity	±3%	(typical) Within dynamic range

Table A-2: Nominal and Typical Characteristics (cont.)

Characteristic	Description	Supplemental Information
Offset Range	±5 V	(nominal) Not adjustable
Maximum Nondestructive Input Voltage	±40 V	(typical) DC plus peak AC Refer to Figure A-2
Probe Coding		TEKPROBE SMA Level 2

Table A-3: Environmental Characteristics

Characteristic	Description	Supplemental Information
Electrostatic Immunity		Tektronix does not warrant the P6207 FET Probe to meet the requirements listed in IEC 801-2
Humidity	10 to 30° C: ≤95% R.H. 30 to 40° C: ≤75% R.H. 40 to 50° C: ≤45% R.H.	Meets the requirements of MIL-STD 28800 E Type III, Class 5
Temperature Range		Meets the requirements of MIL-STD 28800 E Type III, Class 5
Operating	0 to +50° C (+32 to +122° F)	
Nonoperating	−40 to +71° C (−40 to +160° F)	

Table A-4: Physical Characteristics

Characteristic	Performance Requirement	Supplemental Information
Shipping Weight (including accessories)	0.1 kg (0.22 lbs)	(nominal)
Probe Cable Length	1 m (3.3 ft)	(nominal)

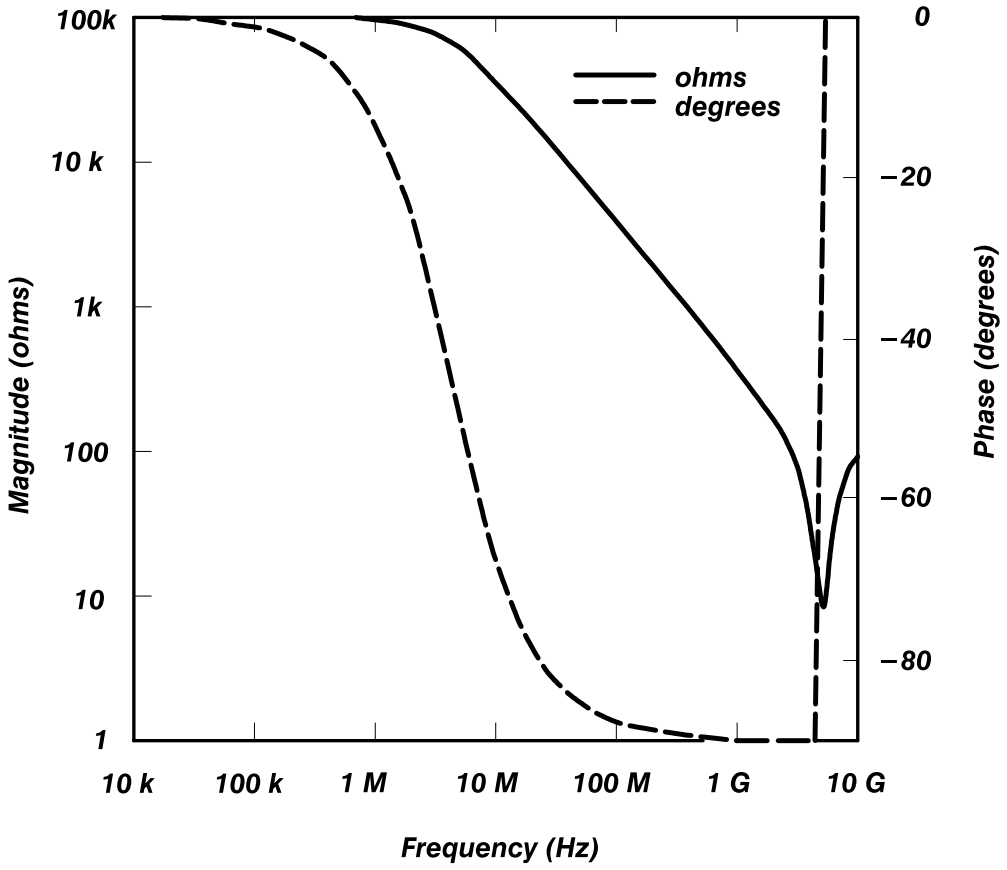

Figure A-1: Typical Input Impedance vs Frequency

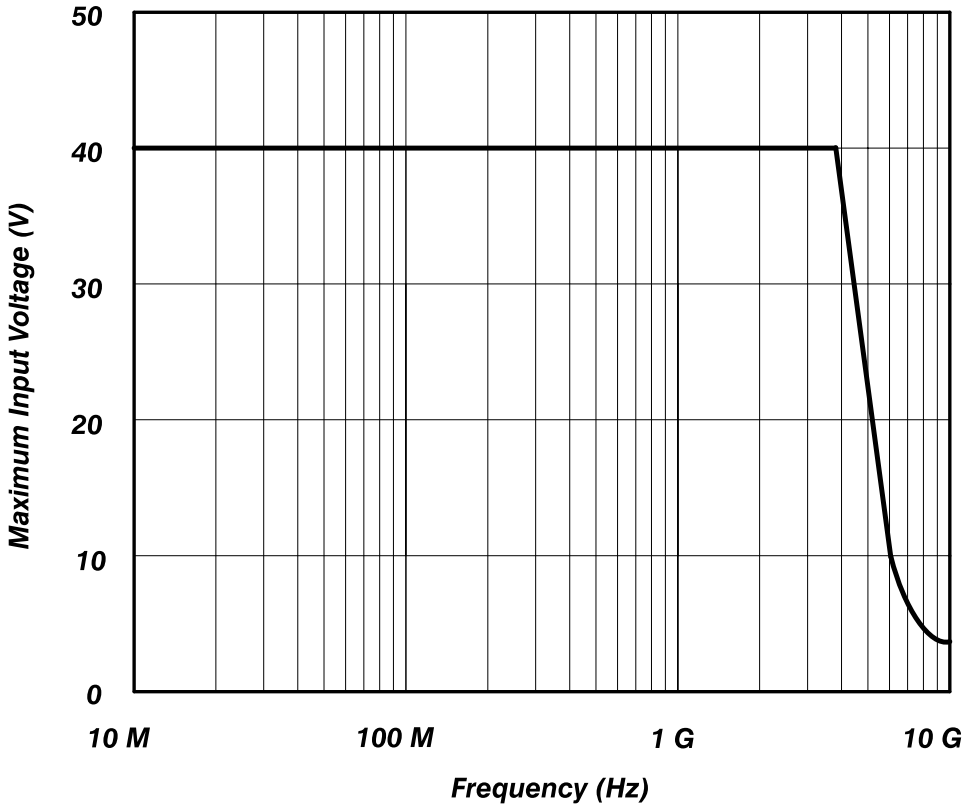

Figure A-2: Voltage Derating vs Frequency

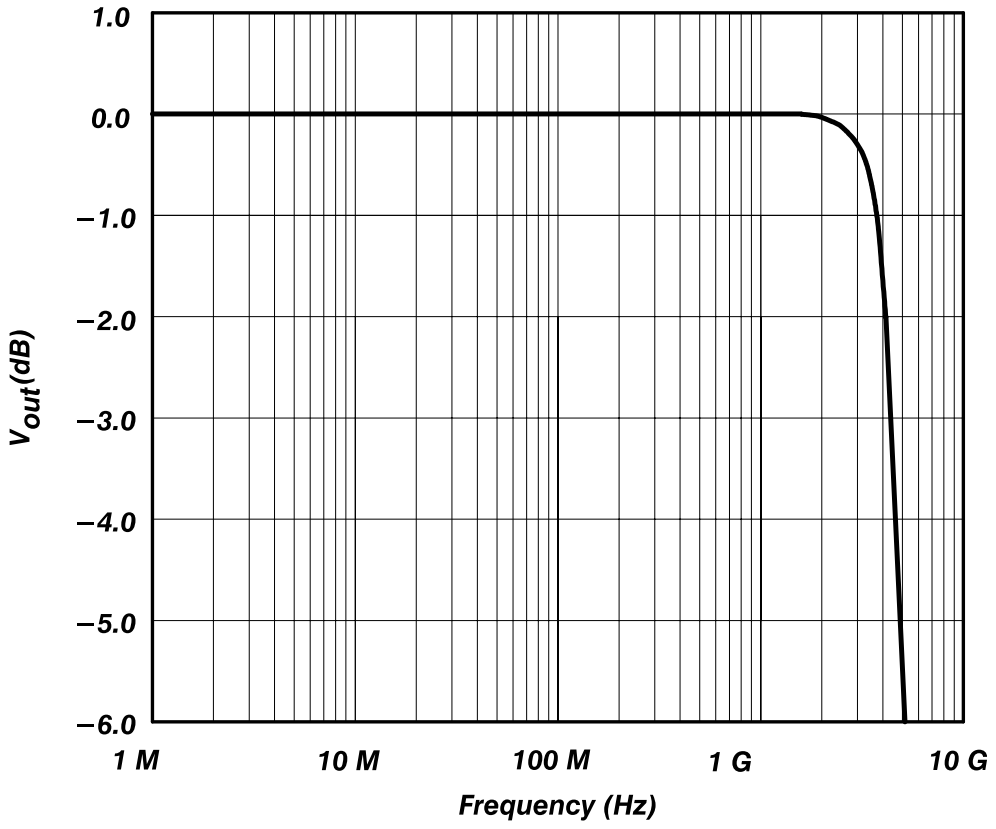

Figure A-3: Typical Frequency Response

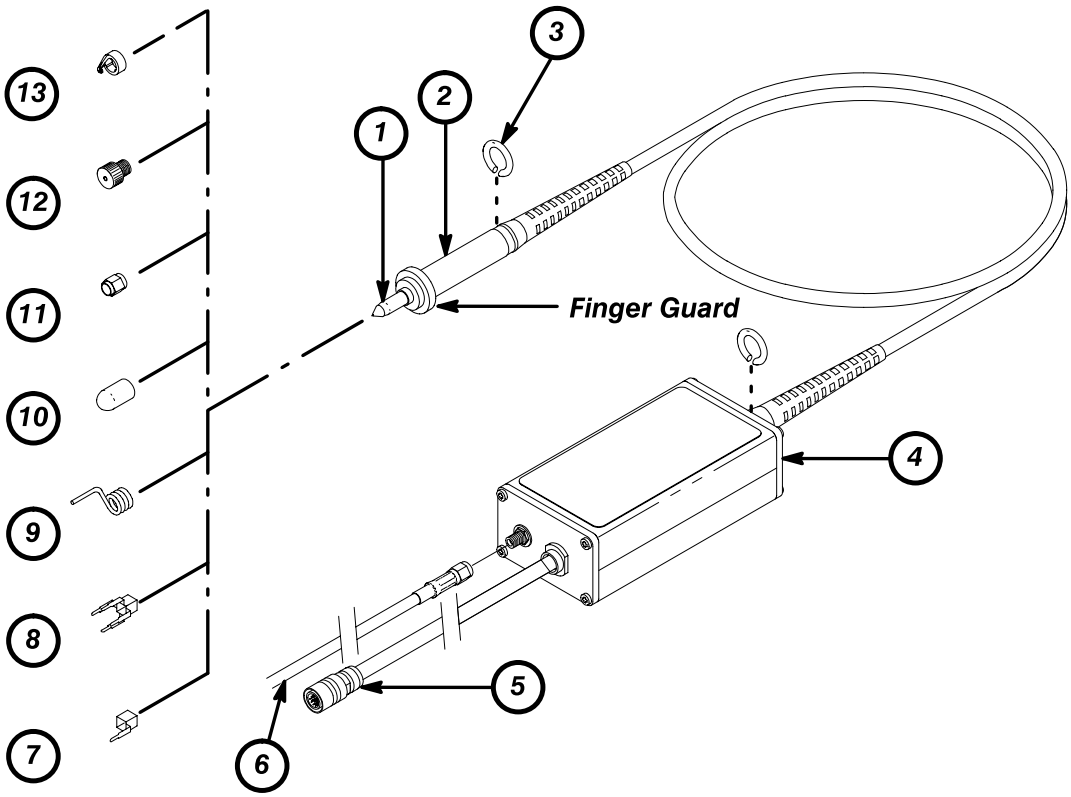

1 *Ground Connection*
2 *Probe Head and Cable*
3 *Marker Band*
4 *Compensation Box*
5 *TEKPROBE Contact Pins*
6 *SMA Cable*
7 *Edge-Tab Ground Socket*
8 *Four-Post Ground Socket*
9 *Low-Inductance Ground Tip*
10 *ESD Protective Cover*
11 *Shorting Cap (SMA Output)*
12 *Shorting Cap (SMA Cable)*
13 *SureFoot Adapter*

Note: Wrist strap accessory is not shown.

Figure 1-1: The P6207 FET Probe and Standard Accessories

Ground Connection

The ground connection makes it possible to reference the signal at the probe tip to ground. The effects of ground lead (or ground connection) inductance are discussed later in this section.