SPECIFICATIONS

FREQUENCY RANGE (GHz)	MODEL	ATTENUATION dB NOMINAL	DEVIATION DC-3	DEVIATION 3-6	DEVIATION 6-11	POWER INPUT AVG. (W) Max	POWER INPUT PEAK (kW) Max	VSWR (Max) DC-1	VSWR (Max) 1-4	VSWR (Max) 4-6	VSWR (Max) 6-11	WEIGHT (Max) Oz	WEIGHT (Max) Grams
DC-11	768	3	±.25	±.50	±.75	20	1	1.10	1.15	1.20	1.30	5.6	159
		6	±.25	±.50	±.75	20	1	1.10	1.15	1.20	1.30	5.6	159
		10	±.25	±.50	±.75	20	1	1.10	1.15	1.20	1.30	5.6	159
		20	±.25	±.50	±.75	20	1	1.10	1.15	1.20	1.30	5.6	159
		30	±.25	±.50	±.75	20	1	1.10	1.15	1.20	1.30	5.6	159

FREQUENCY RANGE (GHz)	MODEL	ATTENUATION dB NOMINAL	DEVIATION DC-3	DEVIATION 3-4	POWER INPUT AVG. (W) Max	POWER INPUT PEAK (kW) Max	VSWR (Max) DC-1	VSWR (Max) 1-4	WEIGHT (Max) Oz	WEIGHT (Max) Grams	MIL-Spec
DC-4	766	3	±0.25	±0.50	20	1	1.10	1.15	5.6	159	Yes
		6	±0.25	±0.50	20	1	1.10	1.15	5.6	159	
		10	±0.25	±0.50	20	1	1.10	1.15	5.6	159	Yes
		20	±0.25	±0.50	20	1	1.10	1.15	5.6	159	Yes
		30	±0.75	±0.75	20	1	1.10	1.35	5.6	159	Yes

FREQUENCY RANGE (GHz)	MODEL	ATTENUATION dB NOMINAL	DEVIATION DC-3	DEVIATION 3-5	POWER INPUT AVG. (W) Max	POWER INPUT PEAK (kW) Max	VSWR (Max) DC-3	VSWR (Max) 3-5	WEIGHT (Max) Oz	WEIGHT (Max) Grams
DC-5	765	3	±0.30	±.50	50	2	1.20	1.30	15.5	440
		6	±0.30	±.50	50	2	1.20	1.30	15.5	440
		10	±0.30	±.50	50	2	1.20	1.30	15.5	440
		20	±0.30	±.50	50	2	1.20	1.30	15.5	440

FREQUENCY RANGE (GHz)	MODEL	ATTENUATION dB NOMINAL	DEVIATION DC-2.0	DEVIATION 2-6	POWER INPUT AVG. (W) Max	POWER INPUT PEAK (kW) Max	VSWR (Max) DC-6	WEIGHT (Max) lb	WEIGHT (Max) Kgrams
DC-6	769	3	±0.4	±.75	150	3	1.35	3.3	1.5
		6	±0.4	±.75	150	3	1.35	3.3	1.5
		10	±0.4	±.75	150	3	1.35	3.3	1.5
		20	±0.4	±.75	150	3	1.35	3.3	1.5
		30	±0.4	±.75	150	3	1.35	3.3	1.5

ORDERING INFORMATION:
Specify Model No. and add dash number suffix for Attenuation in dB.
For example: 768-3
Model No. — Attenuation

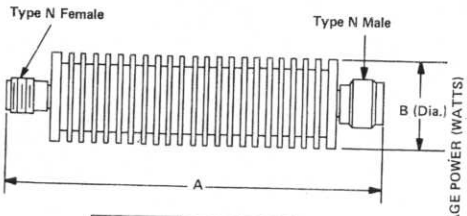

Model No.	A	B
765	6.99	1.64
766	3.07	1.52
768	3.07	1.52

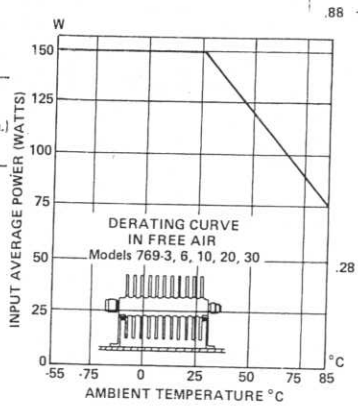

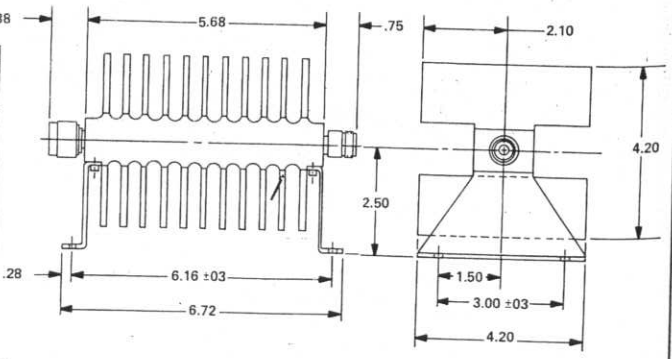

All dimensions are Max. unless otherwise specified.