Electrical Characteristics[1]

MODEL NO.	FREQ. RANGE	MINIMUM POWER OUTPUT @1 dB Compr.		@Satur.	TYP. INTER-CEPT POINT	MIN. SMALL SIGNAL GAIN	SMALL SIGNAL GAIN FLATNESS	DC INPUT (2, 3) POWER (± 0.1 VDC)
		Watts	dBm	Watts	+ dBm	dB	±dB	
LWA015-5	1MHz to	5	37	6.5	47	46	2.0	+24V @ 3.0A
LWA015-10	500MHz	10	40	13	50	46	2.0	+24V @ 5.0A
LWA015-25	10-500MHz	25	44	30	54	48	2.0	+28V @ 12.0A
LWA110-1	100MHz to	1	30	1.5	40	30	1.5	+24V @ 1.0A
LWA110-3	1000MHz	3	35	4	45	39	1.5	+24V @ 2.5A
LWA410-10	400MHz to	10	40	13	50	43	1.5	+24V @ 9.0A
LWA410-25	1000MHz	25	44	35	54	50	1.5	+24V @ 16.0A
LWA714-1	700MHz to	1	30	1.5	40	30	1.5	+15V @ 1.0A
LWA714-5	to	5	37	6.5	47	37	1.5	+24V @ 3.5A
LWA714-10	1400MHz	10	40	13	50	43	1.5	+25V @ 9.0A
LWA912-1	960MHz	1	30	1.5	40	30	1.0	+15V @ 1.0A
LWA912-5	to	5	37	6.5	47	37	1.0	+24V @ 3.5A
LWA912-10	1220 MHz	10	40	13	50	43	1.0	+15V @ 9.0A
LWA1020-1	1GHz to	1	30	1.5	40	30	1.5	+15V @ 1.0A
LWA1020-10	2GHz	10	40	13	50	37	1.5	+15V @ 9.0A
GLWA2040-1	2GHz	1	30	1.5	40	30	1.0	+15V @ 1.2A
GLWA2040-2		2	33	2.5	43	33	1.0	+15V @ 2.0A
GLWA2040-5	to	5	37	6	47	37	1.0	+15V @ 6.0A,-15V @ 0.1A[3]
GLWA2040-10		10	40	12	50	40	1.5	+15V @ 9.0A,-15V @ 0.15A[3]
GLWA2040-20	4GHz	20	43	22	53	43	1.5	+15V @ 18A,-15V @ .2A
GLWA2080-1	2GHz to	1	30	1.2	40	30	1.5	+15V @ 1.2A,-15V @ 0.1A
GLWA2080-2	8GHz	2	33	2.3	43	33	1.5	+15V @ 2.5A,-15V @ 0.1A
GLWA4080-1	4GHz	1	30	1.5	40	30	1.0	+15V @ 1.2A,-15V @ 0.1A
GLWA4080-2	to	2	33	2.5	43	33	1.5	+15V @ 2.5A,-15V @ 0.1A
GLWA4080-5		5	37	6	47	37	1.5	+15V @ 4.5A,-15V @ 0.1A
GLWA4080-10	8GHz	10	40	11.5	50	40	1.5	+15V @ 8.0A,-15V @ 0.15A
GLWA6012-1	6GHz to	1	30	1.2	40	30	1.5	+15V @ 1.5A,-15V @ 0.1A
GLWA6012-2	12GHz	2	33	2.5	43	33	1.5	+15V @ 3.0A,-15V @ 0.15A

RF Input Overdrive Protection: + 10 dB above 1 db compression drive level

RF Input Signal Format: AM/FM/PM/CW/Pulse

Noise Figure: 10 dB max.

Harmonics: -20 dBc at 1 dB compression, typical

Load VSWR: 3:1 max. all phases, indefinitely
input VSWR: 2:1 max.

Spurious Signals: 60 dBc max.

Class of Operation: A (linear)

Connectors: SMA

Construction: In accordance with MES-200 and MES-300

NOTES:
1. All data based on 50Ωload. 2. Maximum operating current at 1 dB compression point.
3. Start up current on these models is only 25% higher (max.) than rated operating current.
4. Specifications subject to change without notice.

Mechanical Characteristics

MODEL NO.	APPROXIMATE DIMENSIONS (excluding connectors) HEIGHT in.	HEIGHT cm.	WIDTH in.	WIDTH cm.	LENGTH in.	LENGTH cm.	WEIGHT lbs.	WEIGHT kg.
LWA015-5	1.31	3.33	2.56	6.50	6.50	16.51	1.25	0.56
LWA015-10	1.31	3.33	2.56	6.50	6.50	16.51	1.25	0.56
LWA015-25	2.00	5.10	2.65	6.73	7.0	17.80	3.50	1.58
LWA110-1	1.31	3.33	2.56	6.50	6.50	16.51	1.25	0.56
LWA110-3	1.31	3.33	2.56	6.50	6.50	16.51	1.25	0.56
LWA410-10	1.31	3.33	2.56	6.50	11.50	29.21	2.00	0.90
LWA410-25	1.75	4.45	7.81	19.84	9.56	24.28	6.25	2.81
LWA714-1	.300	.762	1.50	3.81	2.40	6.10	.500	0.23
LWA714-5	1.75	4.45	3.50	8.89	12.38	31.45	3.50	1.58
LWA714-10	1.75	4.45	7.81	19.84	9.56	24.28	6.25	2.81
LWA912-1	.300	.762	1.50	3.81	2.40	6.10	.500	0.23
LWA912-5	1.75	4.45	3.50	8.89	12.38	31.45	3.50	1.58
LWA912-10	1.75	4.45	7.81	19.84	9.56	24.28	6.25	2.81
LWA1020-1	.300	.762	1.50	3.81	2.40	6.10	.500	0.23
LWA1020-10	1.75	4.45	7.81	19.84	9.56	24.28	6.25	2.81
GLWA2040-1	.600	1.52	1.50	3.81	3.31	8.41	.33	.15
GLWA2040-2	.600	1.52	1.50	3.81	3.31	8.41	.33	.15
GLWA2040-5	.880	2.24	2.67	6.78	6.00	15.24	1.3	.60
GLWA2040-10	.880	2.24	2.62	6.65	7.00	17.78	1.5	.68
GLWA2040-20	.700	1.77	4.80	12.19	8.00	20.32	3.5	1.6
GLWA2080-1	.665	1.69	1.15	2.92	3.67	9.32	.34	.15
GLWA2080-2	.665	1.69	1.50	3.81	3.67	9.32	.34	.15
GLWA4080-1	.665	1.69	1.50	3.81	3.67	9.32	.33	15
GLWA4080-2	.665	1.69	1.50	3.81	4.25	10.80	.33	.15
GLWA4080-5	.820	2.08	2.33	5.99	6.45	16.38	1.8	.82
GLWA4080-10	.750	1.91	3.97	10.08	6.75	17.15	2.0	91
GLWA6012-1	.625	1.59	1.06	2.69	3.50	8.89	.33	15
GLWA6012-2	.625	1.59	1.06	2.69	3.77	9.58	.33	.15

ENVIRONMENTAL CHARACTERISTICS

Temperature: GLWA operating: -40°C to +65°C baseplate
Non-operating: -55°C to +71°C
LWA Operating: 0°C to +71°C baseplate
Non-operating -30°C to +71°C

Altitude: 10,000 feet

Humidity: 95% relative without condensation

Shock: MIL-STD-810C, Method 516.2, Procedure I, 15g's, 11 millisec., 1/2 sine

Vibration: MIL-STD-810C, Method 514.2, Procedure VIII, Curve V, 1 hr. Per axis

TYPICAL OUTLINE

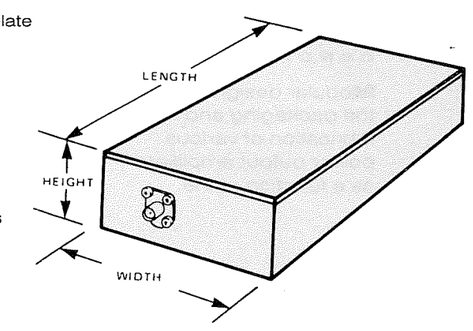

ORDERING INFORMATION

1. Start with basic model number from specifications tables.

2. Contact factory for options.