Strong performance at an extremely affordable price

DATA ACQUISITION PRODUCTS

KPCI-3101
KPCI-3102
KPCI-3103
KPCI-3104

225/400kHz, 12-Bit, Low Gain Multifunction Boards

- **12-bit resolution**
- **Throughput of up to 225kS/s or 400kS/s**
- **Digital I/O scanning speeds of up to 3MHz**
- **16 single-ended or 8 differential analog inputs**
- **23 digital I/O lines**
- **2 analog outputs (KPCI-3102 and -3104 only)**
- **4 counter/timers**
- **Low gain (1, 2, 4, 8)**
- **Pre-, post-, and about-triggering**
- **1024-location channel-gain queue**
- **32-bit DriverLINX® drivers plus a suite of bundled software including ExceLINX™, VisualSCOPE™, TestPoint™, and LabVIEW™ drivers**

Our KPCI-3101/3102/3103/3104 multifunction boards provide strong performance at an extremely affordable price. Fully loaded, they are an attractive one-stop solution, providing everything you need on a single low-cost board.

Functional Description

This family of PCI-bus data acquisition boards features low gain, 12-bit resolution and a choice of throughput speeds. The KPCI-3101/3102 boards provide a throughput of 225kS/s, while the KPCI-3103/3104 are designed for applications requiring a faster input speed of 400kS/s. In addition, these multifunction boards include 32-bit DriverLINX software drivers, TestPoint drivers, and LabVIEW VIs. Keithley's new start-up software is also included at no charge.

Analog Inputs

The analog inputs are software configurable for single-ended or differential inputs and bipolar or unipolar input ranges. An Amp Low connection allows single-ended inputs to be referenced to a common point other than ground to provide 16 pseudo-differential inputs. For added flexibility, a 1024-location channel-gain queue allows you to sample non-sequential channels and channels with different gains.

The Calibration utility allows both manual and automatic software calibrations.

Analog Input Acquisition Modes

These boards can acquire a single value from any channel or a number of samples from multiple channels. To acquire data from multiple channels, the boards provide two scan modes: continuously paced and triggered. Both scan modes can be paced using an internal or an external clock.

The boards provide several triggering modes, including pre-trigger, post-trigger, and about-trigger modes.

- Pre-trigger mode allows acquisition to occur until an external trigger occurs.
- Post-trigger is the standard acquisition mode; acquisition begins after an internal or external trigger event and continues until an end condition occurs or the specified number of samples are collected.
- About-trigger mode allows acquisition to occur both before and after an external trigger.

Analog Outputs

The KPCI-3102 and -3014 boards feature two serial, multiplying, analog output channels. The output range is ±10V at 16-bit resolution. The analog outputs are set to 0V at power-up, and they supply single value updates suitable for DC control signals.

Digital I/O

All the boards feature 23 digital I/O lines. These lines are divided into two 8-bit ports and one 7-bit port. The ports are inputs by default, but can be software-configured for output. When used as outputs, they have sufficient capability to drive external solid-state relay modules (12mA sink and 15mA source).

The status of Ports A and B can be read at the rate of the analog input subsystem by including this special combined 16-bit digital channel in the analog input channel/gain list. When this 16-bit digital channel is the only channel in the channel/gain list, the rate can be increased to 3MHz.

The seven bits of Port C can be written to at the speed of an analog input task that makes use of a channel/ gain list. Up to 1024 unique values can be written to the 7-bit port per analog input scan. The rate of the updates to Port C is limited to the speed of the analog input task.

Counter/Timers

These boards provide four 16-bit counter/timers. Uses include counting events, creating a one-shot or frequency output, and measuring frequency input. They can also be used to set the duty cycle, frequency, and output polarity of the output pulse.

These counter/timers can be cascaded. Cascade two counter/timers internally through software. Cascade three or four counter/timers externally on a screw terminal accessory.

KPCI-3101
KPCI-3102
KPCI-3103
KPCI-3104

Ordering Information

KPCI-3101 12-Bit, Low Gain Multifunction Board, 225kS/s

KPCI-3102 12-Bit, Low Gain Multifunction Board, 225kS/s, with Analog Outputs

KPCI-3103 12-Bit, Low Gain Multifunction Board, 400kS/s

KPCI-3104 12-Bit, Low Gain Multifunction Board, 400kS/s, with Analog Outputs

ACCESSORIES AVAILABLE

C2600	STA-300 to MB-01 Cable
CAB-305	KPCI-3101/3102/3103/3104 to STA-300, 68-pin, 2-meter, Shielded Cable
STA-300	Screw Terminal Accessory
STP-68	Screw Terminal Panel (not CE approved)
MB-01*	16-Channel Direct-Connection Module Mounting Rack
MB-05*	8-Channel Direct-Connection Module Mounting Rack
TESTPOINT	TestPoint Software Package

*Signal conditioning modules for the MB-01 and MB-05 can be found in the Signal Conditioning and Accessories section.

Physical and Environmental Specifications

PHYSICAL:
Dimensions: 8.5 inches (length) by 4.2 inches (width).
I/O Connector: 68 pin Amp (#749621-7).

CERTIFICATION AND COMPLIANCE: FCC Class A verified; will not compromise FCC compliance of host computer CE.

COMPLIANCE: Conforms to European Union directive 89/336/EEC (EMC directive), EN55022, and EN50082-1. (Product is CE marked.)

ENVIRONMENTAL:
Operating Temperature Range: 0°C to 70°C.
Storage Temperature Range: –25°C to 85°C.
Relative Humidity: To 95%, noncondensing.

225/400kHz, 12-Bit, Low Gain Multifunction Boards

Features Summary

ANALOG INPUTS

Board	Channels	Resolution	Input Ranges
KPCI-3101/3102	16 SE/8 Diff	12 bits	±1.25, 2.5, 5, 10 V 0–1.25, 2.5, 5, 10 V
KPCI-3103/3104	16 SE/8 Diff	12 bits	±1.25, 2.5, 5, 10 V 0–1.25, 2.5, 5, 10 V

ANALOG OUTPUTS

Board	Channels	Resolution	Output Ranges	Counter/Timer
KPCI-3101/3103	0	N/A	N/A	4
KPCI-3102/3104	2	16 bits	±10 V	4

Analog Inputs

	KPCI-3101/3102	KPCI-3103/3104
Number of analog input channels		
Single-ended/pseudo-differential	16	16
Differential	8	8
Resolution	12 bits	12 bits
Channel-gain list	1024 locations	1024 locations
Input FIFO size	1024 locations	1024 locations
Input gains	1, 2, 4, 8	1, 2, 4, 8
Input range		
Bipolar	±10, ±5, ±2.5, ±1.25 V	±10, ±5, ±2.5, ±1.25 V
Unipolar	0–10, 5, 2.5, 1.25 V	0–10, 5, 2.5, 1.25 V
Drift		
Zero	±30μV + (+20μV*Gain)/°C	±30μV + (+20μV*Gain)/°C
Gain	±30 ppm/°C	±30 ppm/°C
Input impedance	100 MΩ, 10 pF, Off 100 MΩ, 100 pF, On	100 MΩ, 10 pF, Off 100 MΩ, 100 pF, On
Input bias current	±20 nA	±20 nA
Common mode voltage	±11 V maximum (operational)	±11 V maximum operational
Maximum input voltage	±35 V maximum (protection)	±35 V maximum (protection)
Channel acquisition time	3 μs	1 μs
A/D conversion time	4.44 μs	2.5 μs

Accuracy

Nonlinearity (integral)	±1.0 LSB	±1.0 LSB
Differential nonlinearity	±0.5 LSB (no missing codes)	±0.5 LSB (no missing codes)
System noise	0.3 LSB rms	0.3 LSB rms
Channel-to-channel offset	±40.0 μV	±40.0 μV

Clocking and trigger input

Maximum A/D pacer clock		
Single analog input throughput	225 kS/s @ 0.03% accuracy	400 kS/s @ 0.03% accuracy
Multiple analog input throughput	160 kS/s @ 0.03% accuracy	300 kS/s @ 0.03% accuracy
Multiple analog input throughput	225 kS/s @ 0.05% accuracy	400 kS/s @ 0.05% accuracy
Single digital input channel	3 MS/s	3 MS/s
Minimum A/D pacer clock throughput	1.2 S/s	1.2 S/s
External A/D sample clock		
Minimum pulse width	100 ns (high); 100 ns (low)	100 ns (high); 100 ns (low)
Maximum frequency (analog inputs)	225 kHz	400 kHz
Maximum frequency (digital inputs only)	3 MHz	3 MHz
External digital (TTL) trigger		
High-level input voltage	2.0 V minimum	2.0 V minimum
Low-level input voltage	0.8 V maximum	0.8 V maximum
Minimum pulse width	100 ns (high); 100 ns (low)	100 ns (high); 100 ns (low)

KPCI-3101
KPCI-3102
KPCI-3103
KPCI-3104

225/400kHz, 12-Bit, Low Gain Multifunction Boards

Analog Outputs

	KPCI-3102	KPCI-3104
Number of analog output channels	2 (voltage output)	2 (voltage output)
Resolution	12 bits	12 bits
Output range	±10 V	±10 V
Error: Gain	±32 LSB + Reference	±32 LSB + Reference
Zero	Software adjustable to 0	Software adjustable to 0
Current output	±5 mA maximum	±5 mA maximum
Output impedance	0.3 Ω typical	0.3 Ω typical
Capacitive drive capability	0.001 μF (no oscillations)	0.001 μF (no oscillations)
Nonlinearity (integral)	±16 LSB	±16 LSB
Differential linearity	±8 LSB (monotonic)	±8 LSB (monotonic)
Protection	Short circuit to Analog Common	Short circuit to Analog Common
Power-on voltage	0 V ±10 mV	0 V ±10 mV
Settling time to 0.01% of FSR	50 μs, 20 V step; 10.0 μs, 100 mV step	50 μs, 20 V step 10.0 μs, 100 mV step
Slew rate	2 V/μs	2 V/μs

Digital I/O

	Port A	Port B	Port C
Number of lines	8 bidirectional	8 bidirectional	7 bidirectional
Inputs			
High-level input voltage	2.0 V minimum	2.0 V minimum	2.0 V minimum
Low-level input voltage	0.8 V maximum	0.8 V maximum	0.8 V maximum
High-level input current	3 μA	3 μA	100 μA
Low-level input current	–3 μA	–3 μA	–100 μA
Maximum internal pacer clock rate (single digital channel)	3 MHz	3 MHz	3 MHz
Outputs			
Output driver high voltage	2.4 V minimum (I_{OH} = –15 mA)	2.4 V minimum (I_{OH} = –15 mA)	2.4 V minimum (I_{OH} = –4 mA)
Output driver low voltage	0.5 V maximum (I_{OL} = 12 mA)	0.5 V maximum (I_{OL} = 12 mA)	0.8 V maximum (I_{OL} = 4 mA)

Counter/Timer

NUMBER OF COUNTER/TIMER CHANNELS: 4.

CLOCK INPUTS:

High-Level Input Voltage: 2.0V minimum.

Low-Level Input Voltage: 0.8V maximum.

Minimum Pulse Width: 100ns (high); 100ns (low).

Maximum Frequency: 5.0MHz.

GATE INPUTS:

High-Level Input Voltage: 2.0V minimum.

Low-Level Input Voltage: 0.8V maximum.

Minimum Pulse Width: 100ns (high); 100ns (low).

COUNTER OUTPUTS:

Output Driver High Voltage: 2.0V minimum (I_{OH} = –15mA); 2.4V minimum (I_{OH} = –3mA).

Output Driver Low Voltage: 0.5V maximum (I_{OL} = –24mA); 0.4V maximum (I_{OL} = –12mA).

Configuration Guide

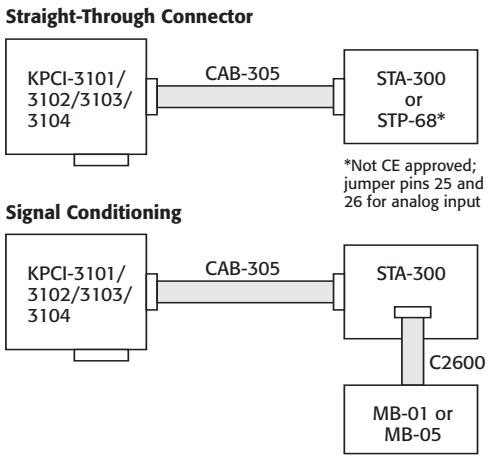

Connector Pin Assignments

The analog input, analog output, digital input, and digital output connections are made with a 68-pin, subminiature D connector at the rear of the computer.

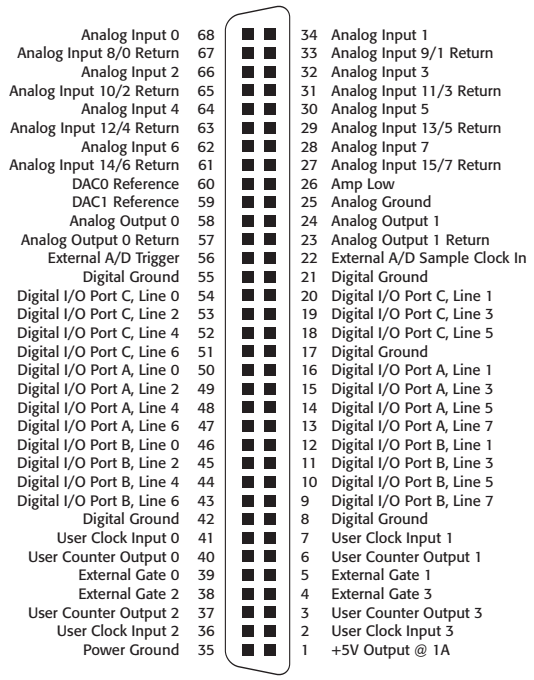

When using STP-68, make a connection between Amp Low and Analog Ground (W1 jumper on STA-300).